3741

DM2800

OPERATION & PROGRAMMING

MANUAL

DYNA MECHTRONICS
926W MAUDE AVENUE
SUNNYVALE, CA. 94086
TEL: (408) 773 - 8899
FAX: (408) 773 - 8910
TWX: (408) 773 - 8919
ISSUED: MARCH / 1989

SAFETY RULES AND PRECAUTIONS

1. KNOW YOUR MACHINE

- Read the operating manual carefully. Learn the machine features, applications and limitations. Follow all recommended operating procedures, maintenance procedures.

2. INSTALLATION

- Only use a qualified electrician to install the power.
- Make absolutely sure the power line ground is adequately grounded.
- Avoid dangerous environments. Do not locate this machine in damp, wet, gaseous or explosive locations.

3. MACHINING

- Keep the area well lighted.
- Secure the work adequately and properly. If a vise is used, make sure it is specifically designed for NC work or of equivalent quality.
- Select the right tool and the right speed. Do not force the tool.
- Maintain and keep clean, all the tool holders.
- Do not run the machine with the spindle guard off.
- Always run the machine with the coolant doors closed.

4. PERSONNEL

- Should always wear safety glasses. The chips can be hot and dangerous. Wear a dust mask if the cutting creates dust.
- Should not wear loose clothing when operating the machine.
- Should not try to grasp the tool before the spindle has stopped turning.
- Should vacuum chips up, not air blow them away. The chips can be blown all over and into the machine and in the long run can cause serious problems.

GENERAL INFORMATION

AND

INSTALLATION

INSTALLATION

1. STEPS FOR MECHANICAL INSTALLATION

SHIPPING CRATE

The crate measures 35"x40"x30" and weighs 800 lbs. It should be moved from the heaviest side (back of the machine) by means of a fork lift truck.

UNPACKING

The machine is attached to the wooden pallet at the base. The crate sides are screw bolted to the wooden pallet and to cross ties within the crate. The screws should be removed around the outside base of the crate and the sides lifted straight up to clear the machine.
The machine should be inspected for signs of damage. If there is any indication of damage, a claim should be filed with the carrier. For other damages refer to the warranty policy.

REMOVING THE PALLET

The machine is held to the wooden pallet with six nuts. These should be removed. Then the machine can either be lifted directly by the temporary lift points (painted red) off the pallet or lifted by means of a fork lift truck with the tines inserted along the sides of the base.

LOCATING THE MACHINE

The machine should be placed on an adequate table (steel) capable of supporting approximately 700 lbs (300Kg).
The bolt hole pattern is given in the illustrations.

FREEING THE COUNTER WEIGHT

The Z axis is counterbalanced by a counter weight that is bolted to the column for shipment. These bolts should be removed and kept inside the tool box. They should be replaced if the machine is to be moved.

CONTROL PANEL SUPPORT

This bolts on to the coolant tray with 4 socket screws. The controller slides in on top.

2. STEPS FOR ELECTRICAL INSTALLATION

CHECKING THE VOLTAGE

Slide up the cover of the transformer and check that the power cord is correctly installed to the voltage you requested. It should be either at 110 VAC or 220 VAC, both single phase.
Make sure that the outlet corresponds in voltage.
Make sure that the ground line (color green) corresponds to the ground pin of the power plug.
Make sure that the ground in the socket is grounded and not floating free in the wall.

CURRENT REQUIREMENTS

At 110 VAC single phase current is 12 Amps maximum
At 220 VAC single phase current is 6 Amps maximum

VOLTAGE SURGE REQUIREMENTS

The voltage should always be within 110 VAC +/- 10% or 220 VAC +/- 10% . There may be present, at some times, higher or lower voltages due to other heavy equipment being turned off or on from the line. This will lead to erratic behavior of the machine if these limits are exceeded.

R.F. REQUIREMENTS

Do not locate the machine near any electric arc welding sites. This can cause the machine to operate erratically.

POWER PACKAGE

Open the power package and check that there are no loose connections and that the boards are correctly seated. Sometimes the crate gets inverted in shipping.

3. POWERING UP

1) Make sure that the main power switch on the control panel is off and the spindle switch is off.

2) Slide in the controller and plug in the controller cable. Always before unplugging out or plugging in the controller make sure there is no power i.e. the main power switch is off.

3) Plug in the wall power cord. Rotate the red emergency switch clockwise to check that it is OUT on the control panel and switch the main power switch on.

4) The controller should display READY? Press the YES key and the Z axis will retract, freeing the wooden block under the spindle head. The machine is now initialized on each axis to the home position. The controller will display MODE?

5) Check the spindle. Rotate the switch to spindle local (i.e. you are in control-not the controller) and turn the spindle ON switch. Rotate the speed dial. The spindle should rotate. The rpm can be seen in the display at the front of the spindle head.

4. POWERING DOWN

Turn the main power switch to OFF.

5. LEVELING THE MACHINE

Clean the table and inside the spindle nose with a light oil. This removes the anti-rust coating. A level indicator should be placed on the table and the leveling adjusted until the table is horizontal in both the X and Y axes. The level reading should be under 0.04mm/meter or 0.0005"/foot.
This level adjustment is important for proper machine operation.

6. AUTOLUBE SYSTEM

The autolube system is mounted at the back of the machine on the left side of the vertical column. The system is automatically activated when the machine is turned on and periodically lubricates the slides and ball screws. The system should be checked occasionally and should not be allowed to run dry. Switch the machine off when not in use or the autolube system will eventually pump dry.

7. INSPECTION REPORT

Accompanying the machine is a clear plastic envelope that contains the inspection report. The identification numbers on the report and on the machine should be verified for agreement. Each machine goes through a rigorous accuracy test for parallelity, accuracy and spindle total indicator runout (TIR). The values which were actually measured are printed beside the allowable quality control (QC) values and are typically very much better than the permissible deviations.

8. ACCESSORIES

Included with each machine are:

1) A tool box containing a variety of tools.
2) A clamp kit with T nuts, bolts, clamps, and riser blocks

9. OPTIONAL ACCESSORIES

Optional accessories are packaged separately. Operation and assembly instructions for the optional accessories are included in their own shipping cartons if not in this manual. Operating instructions for the controller are contained in this manual.

MECHANICAL and ELECTRICAL

OPERATION

ELECTRICAL AND MECHANICAL OVERVIEW

There are several adjustments and operations that the user may have to perform manually or be aware of before operating the machine.

1. SPINDLE SPEED RANGE ADJUSTMENT

In order to optimize the torque transmission between the motor and the spindle, there is a three level V-belt setting. It depends on tool diameter, material and tool as to what setting is to be selected. The speed ranges are marked at the side of the spindle head. To change the setting, one has to remove the side guard plates, loosen the motor mounting plate, slide the motor assembly forward, move the V-belt to the desired setting, push the motor back to tighten the belt (but not too tightly), relock the motor plate and remount the guard plates.
Please note that this belt setting is not designed for every day changing, but to give the user the ability to configured his required speed range.

2. SPINDLE MOTOR

The motor is 1.25 HP brushless D.C. motor. There is a 400 line encoder mounted on the rear shaft for velocity feedback and an electric brake. The motor is designed to run from 200 to 5000 rpm. Please note that the maximum HP is only delivered at maximum rpm. If the RPM is set at 2500, then the motor will only deliver 0.625 HP. If there is going to be very heavy cutting always go into low gear with the V-belt setting.

3. SPINDLE MOTOR CONTROL

This is best explained by a diagram:

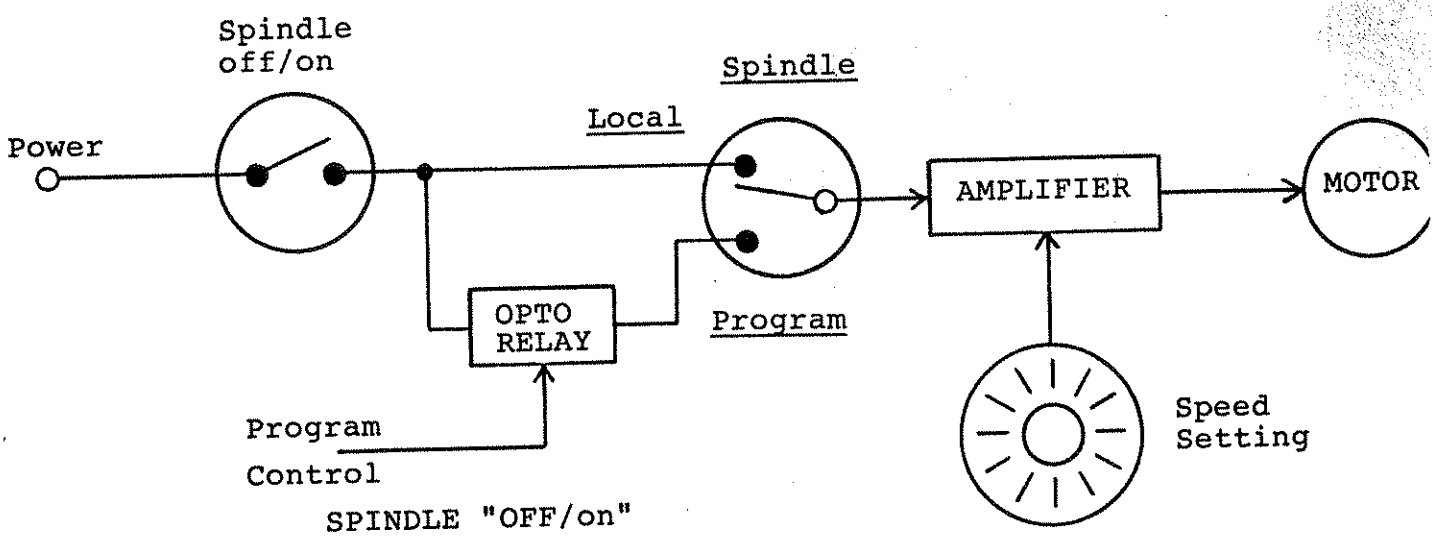

The SPINDLE OFF/ON switch allows power to flow to the LOCAL setting of the SPINDLE LOCAL/PROGRAM switch or to flow through an opto relay to the PROGRAM setting of this switch. When in LOCAL the user is in charge. When in PROGRAM the program will turn the spindle OFF or ON with the opto relay. The speed of course has to be preset, before running the program.

4. THE DRAWBAR

The tool holders are clamped or unclamped by pulling the drawbar handle forward. Release the handle slowly. Only change tools when the spindle is STATIONARY.

5. RPM PICKUP

There is a hall effect pickup under the spindle pulleys that detects two magnets inserted into the bottom of the spindle pulley. This gives the exact RPM of the spindle.

6. TOOLING

The spindle taper is ISO 30. It will accommodate BT30 or CAT30 tool holders.
The drive pins on the spindle nose allow the BT toolholder to be oriented 2 ways while the CAT is designed for only one orientation position. This is done by reversing one of the drive pins. Since there is no automatic tool changing the user does not care. The pull studs for the tooling are supplied by Dyna.
The pull studs are not interchangeable. BT has metric threads, CAT has inch threads.

7. ELECTRONIC PROBE ASSEMBLY

This is used during SET UP and measuring Z offsets of other tools (from tool 1). It greatly simplifies these procedures.
The user must enter the PROBE HEIGHT (in mm) into his controller before using it. This height must be measured by the user himself as each probe's height varies slightly. It plugs in under the controller cable.

8. EMERGENCY SWITCH

Hitting this switch deactivates all power to the machine and activates capacitively stored power to brake the spindle.
To restart, rotate the switch clockwise so it clicks out, then if necessary, go to emergency move on the axis to free the tool. It will be necessary to also restart the program from the beginning and re-establish the set up position.

9. HALT KEY

Sometimes it is necessary to halt the program while running. Touching the lower right side of the controller-the HALT KEY- will cause the program to halt at the end of its current move, arc or function. This is not an instantaneous halt but it does allow restarting by touching the NEXT key.

10. COOLANT

The coolant pump cord is plugged into the power pack above the autolube system. The voltage is 110V AC and the switch to control this pump is on the control module marked coolant OFF/ON.
In connecting the coolant hose use the enclosed pipe fittings to go from the plastic tube to the rubber hose.

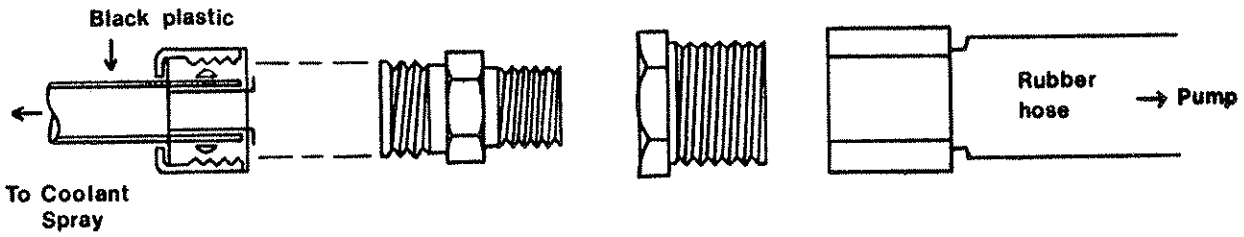

11. THE AXES

There is sufficient thrust on the axes to break a 3/8" end mill. The user should take great care when machining to keep his fingers clear even when the spindle is off and he is just positioning the tool. The maximum thrust is around 800 lbs. Each axis is identical, only the length of the screw is different. Each ball screw is preloaded at the ball nut and preloaded on the bearings. The ball screw lead is 2.5 mm. There is a gear reduction of 5:1 from it to the 200 steps per revolution of the stepper. This gives a step resolution of 0.0025 mm.
Also on each axis is a precision limit switch to which the axis homes to when the machine is switched on, after receiving a YES to READY? on the controller. These should be kept free of chips and debris.
This initial position is called the HOME POSITION. The procedure is called INITIALIZATION in which the controller, will send each axis to the home position.. The controller will measure, the backlash on each axis, and this error is factored into every move.
The backlash is displayed for each axis momentarily and should remain fairly constant and repeatable for each axis. It is displayed in mm. For inches divide by 25.4.
The display will show MODE? and you are ready to run or enter a program.

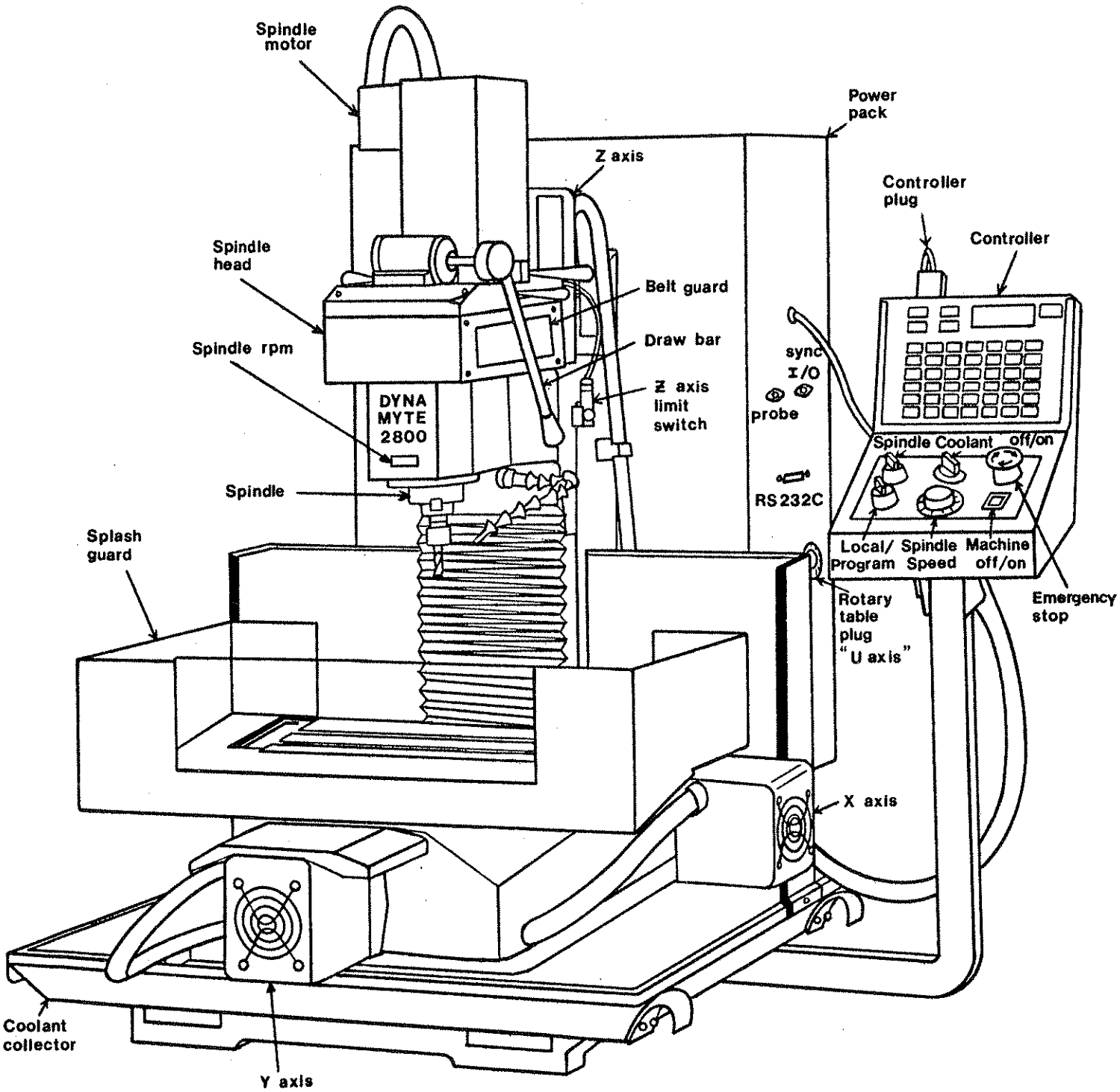
Spindle motor
Power pack
Z axis
Controller plug
Controller
Spindle head
Belt guard
Spindle rpm
Draw bar
sync I/O
Z axis limit switch
probe
DYNA MYTE 2800
Spindle Coolant off/on
Spindle
RS 232C
Splash guard
Local/ Program
Spindle Speed
Machine off/on
Rotary table plug "U axis"
Emergency stop
X axis
Coolant collector
Y axis

PART 1 OF MACHINE AND CONTROLLER.

1. The controller, modes, clearing memory, line numbers, shift key.

2. Axes and HOME position.

3. The SET UP position. (or REF. position)

4. Z MAX and Z CLEAR

5. The PROBE - entering probe thickness to controller.

6. Program structure

   Enter mode

   1. START KEY
   2. TOOL DIAMETER
   3. FEEDRATE KEY
   4. SET UP KEY
   5. END KEY

7. Running a simple program

8. SET UP in RUN MODE

1. THE CONTROLLER

The controller is simply a device that stores instructions, up to 900 of them and when asked to, will start to execute them sequentially. Most of these instructions are tool moves, some are instructions to the controller and some are functions which execute a variety of complex moves to save the user the effort to figure them out. A PROGRAM is just a sequence of instructions. All the instructions are single keystrokes on the controller.
You can see the current instruction through the alphanumeric display. The display may ask questions (?) and you have to answer with the YES or NO keys or it may indicate by nnn or nn or n that it needs a numeric value. In some cases the entry is obviously numeric so no prompting is involved. You tell the controller by touching the NEXT key that the entry was finished.
The first three numbers on the display usually indicate the LINE NUMBER. It starts at 000, 001, 002,..... and continues up to 900. A program can begin on any line number but in the examples that follow we start at line 000.
You will notice four keys at the top left side next to the display with lights beside each key. These we call MODE keys. Selection of one tells the controller what you want to do. The light will come on. The modes are :

1) PROGRAM ENTER. This is for entering instructions to make a program.
2) PROGRAM RUN. After entering a program, locate the line number at the start of the program and go into the program run mode. The controller will start executing the instructions.
3) LINE NO. Allows the entry of line number - you can't alter the line number in program enter mode. It allows also line insertion, deletion program clearing and RS232C communications.
4) MANUAL. Used for manual control of the machine, entering probe height, measuring tool offsets and machine diagnostics.

To explain how this particular mode, keystroke or function works we use a simple flowchart. They are usually self evident as the choice is dictated by the YES/NO key and the exit by the NEXT key or a MODE key.

EXAMPLE 1

When you have just switched a new machine on, answered yes to ready and it has initialized, it is best to clear all the 900 lines in the memory.
At MODE? press LINE NO. (a mode key), press CLEAR and the displaywill show CLEAR MEMORY? Press the YES key.
The display will show START LINE > nnn. Enter 0,0,0 then press the NEXT key.
The display will then show END LINE > nnn. Enter 9,0,0 then press the NEXT key.
The display will then show 000 > 900 SURE? , press the YES key and line numbers 000 to 900 will be cleared.

We can re-write this as a flowchart:

CLEARING MEMORY (OR A PROGRAM) IN THE CONTROLLER

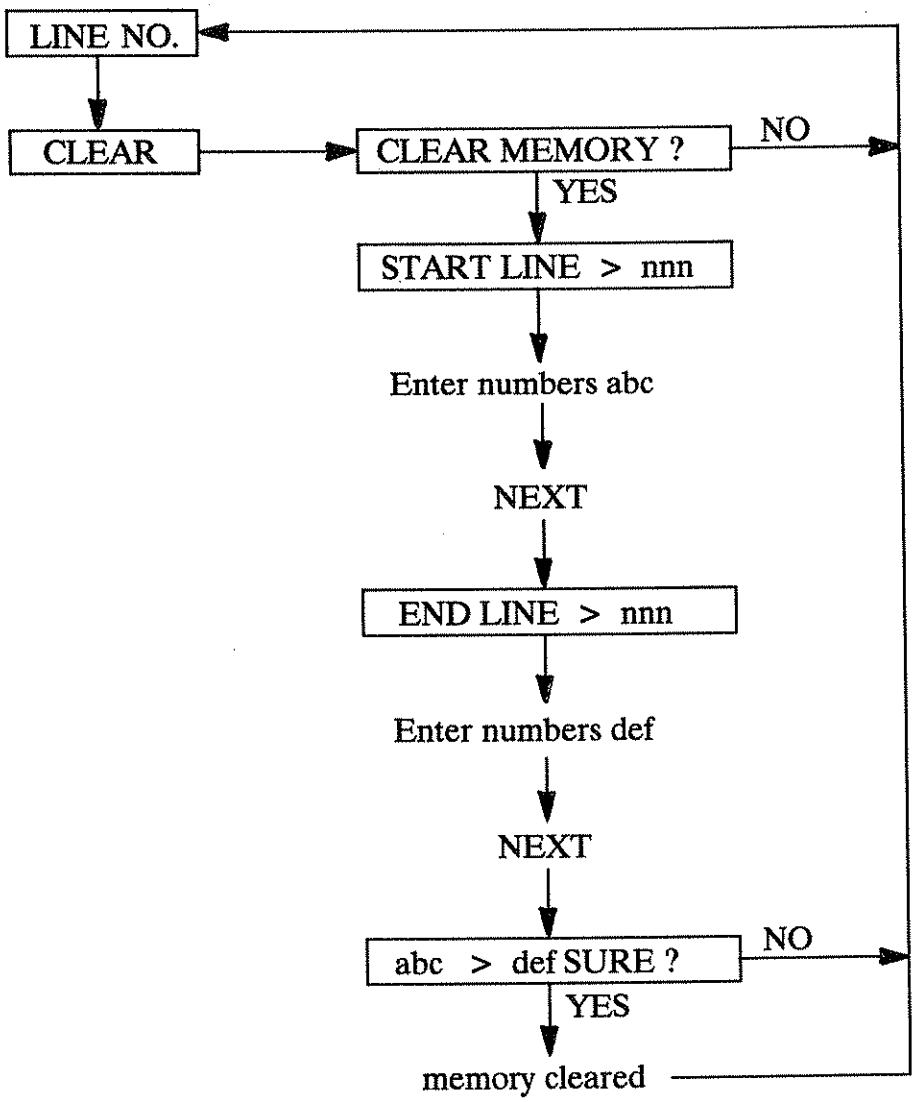

EXAMPLE 2

SELECTING A LINE NUMBER

You want to enter a program at line number 100 and run it. Do this:

LINE NO (MODE KEY)	enter 1, 0, 0 (NUMBER KEYS)	PROGRAM ENTER (MODE KEY)

You are now ready to enter a program at line 100. If the program ends at 122 you have to go back (previous key, 22 times) or go to LINE NO mode, enter 100, then press PROGRAM RUN to run it.
The SHIFT key is at the bottom on the left column. It is actually a shift down key to access the blue keys existing underneath the horizontal line on some of the keys. The light will come on when touched. All the functions are located here. Once the key is pressed the shift down is cancelled.

2. AXES AND HOME POSITION

When the machine has initialized to the limit switches it is at its HOME position. You will see that the spindle head will go up to the top and the table will position itself such that the lower left side is underneath the center of the spindle. We can put an axes here with the origin at the tool tip, like so :

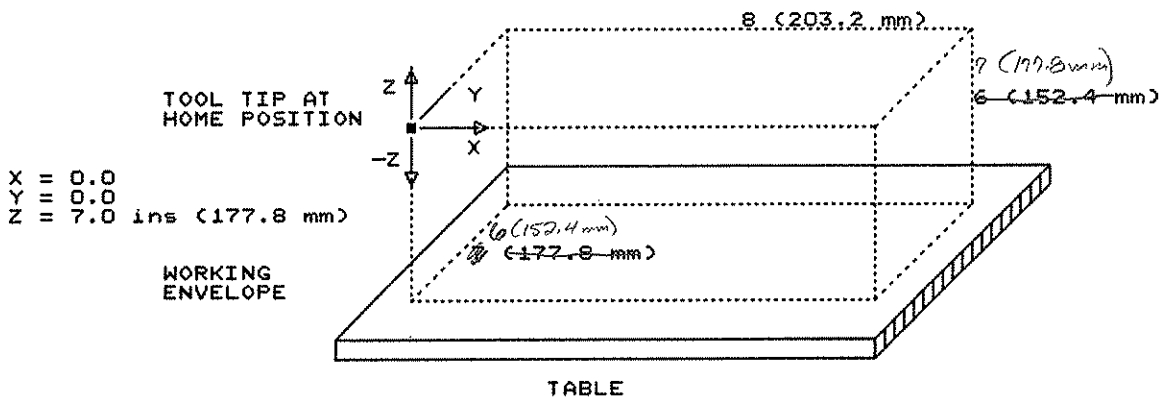

IN ALL MOVEMENTS you consider the TOOL TIP AS MOVING, NOT THE AXES. You can see that the only movement possible on Z is a negative downwards move. X and Y moves can only be positive. The size of the box - the work envelope is fixed in X and Y. It is the maximum travel on these axes. The Z side of the box depends on the length of the tool. Be-careful, with a long tool, the work envelope box can go UNDER the table. The U AXIS refers to the rotary table option. There is no home position for it.
To exercise the machine on each axis - over the envelope, see if you can enter this program at line 000 in program enter mode.

000	[START] INS 00		Use the START KEY - answer YES to INCHES. Enter 0,0 for program number.
001	[FR] [X Y Z]	30	Use the FEED RATE KEY enter xyz then 3,0
002	[GO] c [X]	8	Use Go ABS KEY with axis & COMEBACK key
003	[GO] c [Y]	6	
004	[GO] c [Z]	0	
005	[SKIP TO]	002	You will skip back to line 002
006	[END]		Answer NO twice to get END.

Go to program run with display to 000. To stop hit HALT key, to continue, hit the NEXT key.

3. SET UP POINT

Trying to machine a part from the HOME POSITION would be somewhat painful in calculating all the distances involved so what we do is to move the origin by means of the SET UP instruction. This instruction is put into the program before we begin cutting the part. When the controller starts running the program it will stop and allow the user to move the tool tip by means of jogging in each axis (or to slowly run each axis to the probe). This SET UP point becomes the origin for subsequent moves. Usually the choice of SET UP point will correspond to the point on the drawing where all the measurements are taken. So we have :-

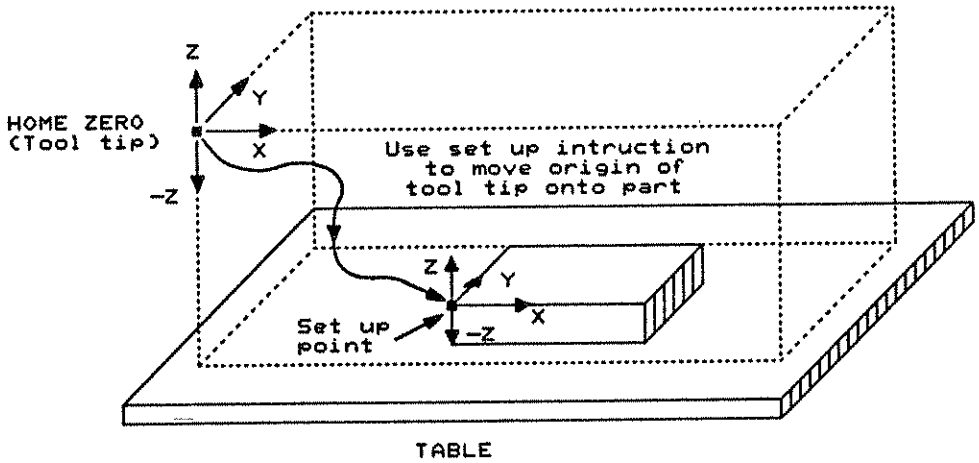

If the part is to be cut out of a block then X and Y set up points need not be accurate - only Z really matters.
This SET UP point is sometimes called the REFERENCE ZERO and the axes the REFERENCE COORDINATES. (as on a drawing). All the functions are referenced to this SET UP point.

4. C OR Z CLEAR

During the SET UP of X Y Z you will also have to set up C. It is simply the height of the tool above Z = 0 (the set up point) which will clear the part completely so you can move X and Y anywhere across the part. If you don't set this point C it will default to Z max, that is the spindle goes to the top at home zero.

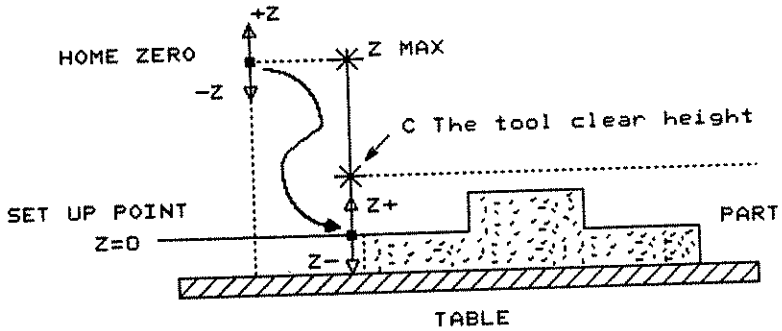

There is one key that has 2 instructions on it

Z ---> Z CLEAR	The display shows	Z > C
Z ---> Z MAX		Z > Z MAX

When run these will move the tool tip vertically up to the Z = C point or Z MAX point.

5. THE PROBE

An electronic probe is recommended to find the Z reference position and to measure the Z offsets of several tools.
It is clearly difficult to position the tool accurately on the surface of the part and if the tool has to be centered exactly on the lower left corner of the part the situation is even more difficult. It is also clearly difficult to measure the Z offsets of several tools (i.e. the height difference) if they are to be used in one program. The procedure to measure this is called TOOL CALIBRATION.
That is why the probe is required. It detects the tool electronically and stops the appropriate axis at the correct value. It has its own offset or height which must be measured in MM or in inches and multiplied by 25.4 .
This value is entered into the controller as follows:

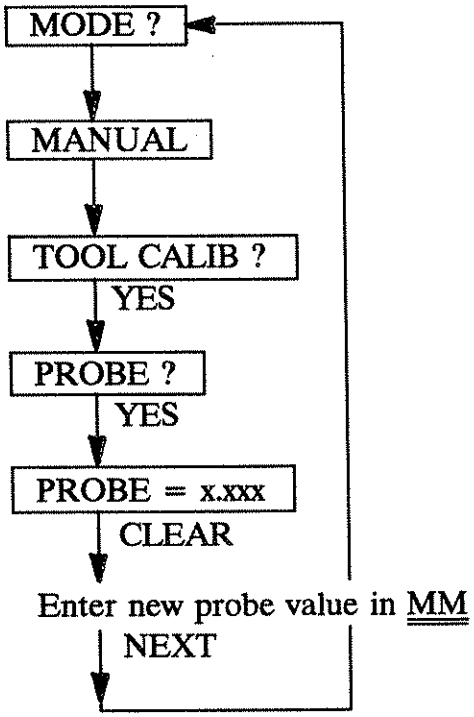

The old values should be cleared out and the new measurement put in.
The probe is now ready to be used. It is plugged in at the right side of the machine.

6. PROGRAM STRUCTURE

A program to machine a part must consist of three sections and a typical program will look like this:

	LINE NO	INSTRUCTION	
START SECTION	000	START INS 01	This section contain all of the required machine parameters such as, program no. dimension system, tool diameter, feed rates, and set up instruction.
	001	TD =.125	
	002	FR XYZ = 10.0	
	003	SET UP > zcxyu	
MIDDLE SECTION	004	GO X 1.0000	This section contains instructions for machine moves, zero-ing coordinates and functions.
	005	GO Y 1.0000	
	006	GO Z -0.1250	
	007	GO Y 2.0000	
	008	GO X 3.0000	
	009	GO Y 1.0000	
	010	GO X 1.0000	
	011	Z > C	
END SECTION	012	END NEWPART	This section contains either the END instruction or variations of the END instructions to allow the user to replicate or repeat the program.

You will see that the first four instructions follow the keys on the left column of the controller. The END instruction is also there. On MODE? go to PROGRAM ENTER and start at line 000. We will go into detail on these instructions. We omit line numbers on the flowcharts. Press the keys and try the options.

START INSTRUCTION (START KEY)

Must always be at the beginning of a program

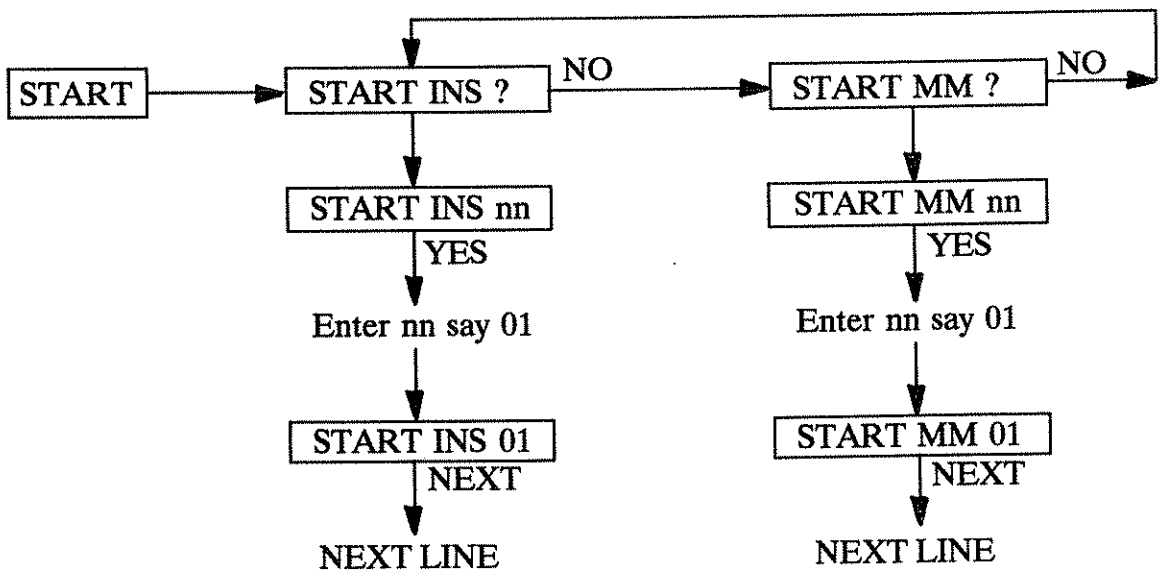

1) The entire program must either be in INCHES or METRIC
   METRIC has 3 numbers after the decimal point
   INCHES has 4 numbers.
2) nn is a program ID number. It can be 00, 01, 02....99 and is strictly a user convenience.
3) At any time CLEAR will clear out this instruction

TOOL DIAMETER INSTRUCTION (TOOL DIAMETER KEY)

The controller must know the tool diameter (except when drilling).

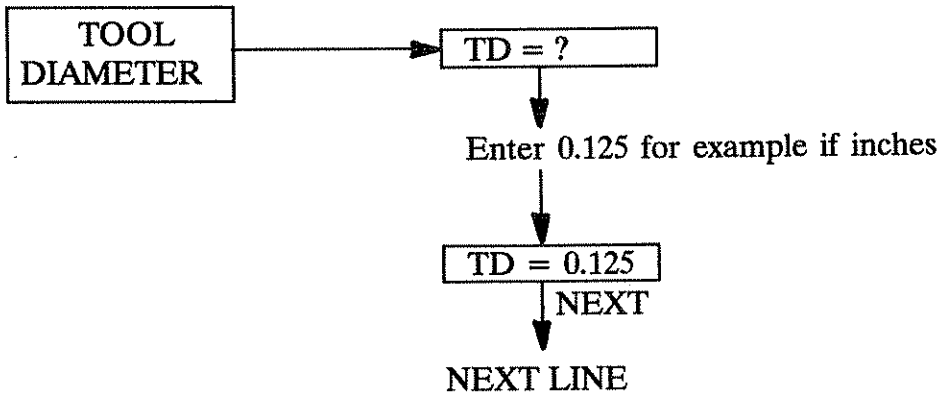

1) For each subsequent TOOL CHANGE you must enter a new tool diameter.
2) If START is in metric, the diameter has to be in metric, if inches then the diameter is in inches as well.
3) Again the CLEAR key will clear out this instruction.

FEED RATE INSTRUCTION (FEEDRATE KEY)

The controller needs to know how fast you want to go.

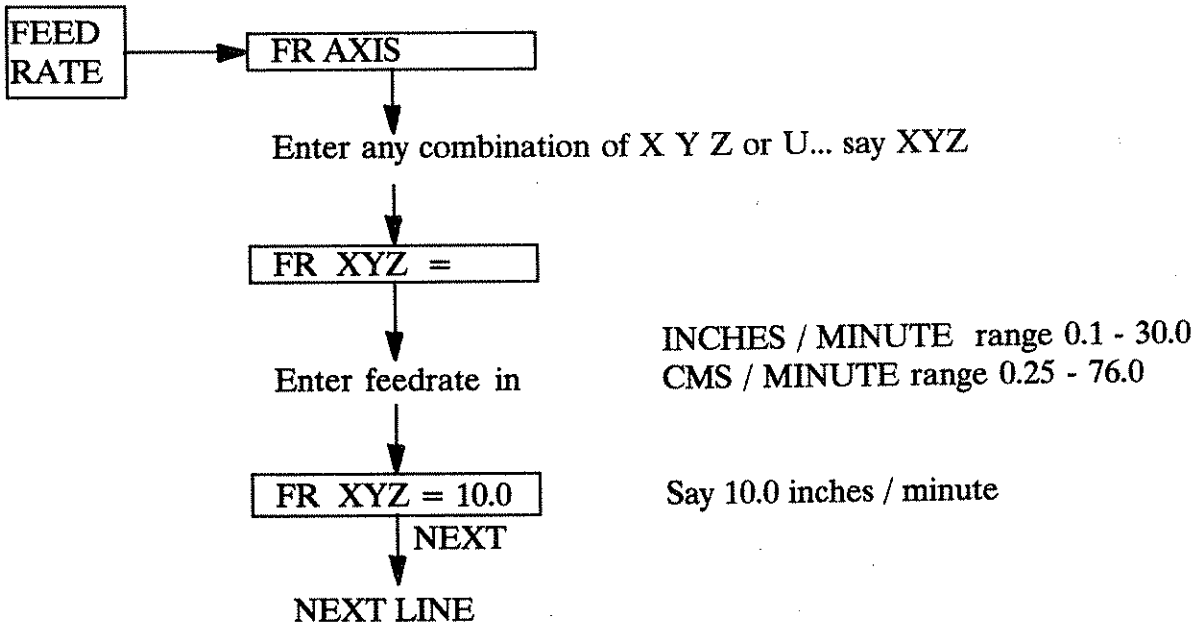

1) The axis can be any group out of XYZU.
2) For ultra slow movement you can enter 0.05 INS/MIN only or 0.13 CM / MIN only.
3) If no feed rate is specified the default is 8 INS/MIN or 20.3 CM/MIN.
4) The leading zero must be entered for fractional speeds.
5) This instruction can be entered as many times as required.
6) It is customary to go slower on Z for tool entry into the work, so you can have 2 instructions.

```
002  FR  XY  =  10.0
003  FR   Z  =   2.0
```

for example.

7) Use CLEAR to clear this instruction.

SET UP INSTRUCTION (SET UP KEY)

The controller must know where the set up origin is going to be on the part.

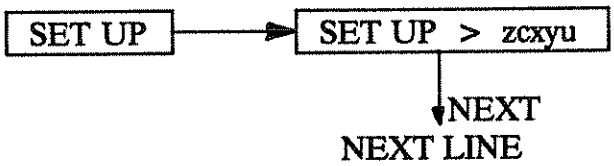

You simply enter this instruction in PROGRAM ENTER MODE. It only becomes operational in PROGRAM RUN MODE when you are ready to cut the part. The controller will start looking at the jog keys and the probe at this instruction.

After this instruction we have the move instructions or pre-programed functions, tool changes etc. or a mixture. These will be covered in the following section but we can easily try entering these instructions to cut a simple rectangle on 1/4" thick acrylic with a 1/8" tool. Let us move the tool as follows :

GO	X	1.0	(A)	
GO	Y	1.0	(B)	Start rect.
GO	Z	-.125		lower Z into
GO	Y	2.0	(C)	plastic
GO	X	3.0	(D)	
GO	Y	1.0	(E)	
GO	X	1.0	(B)	
Z > C				raise tool

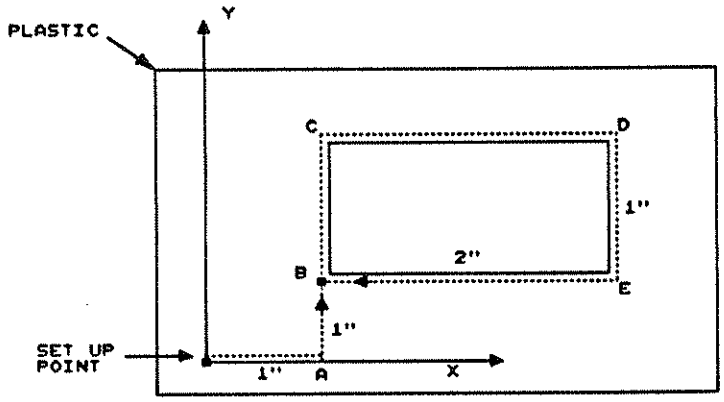

The GO instruction is the GO ABS key or "Go to this absolute value". It is the first key on the second column.
When entering the numbers you can ignore the trailing zeros.
The Z > C key is at the top of the third column.

END INSTRUCTION (END KEY)

All programs must end with this instruction and it has several variations that allow repetitive production (END NEWPART), repeat of the entire program (END NEW REF) either at random or in a periodic away in X and Y.

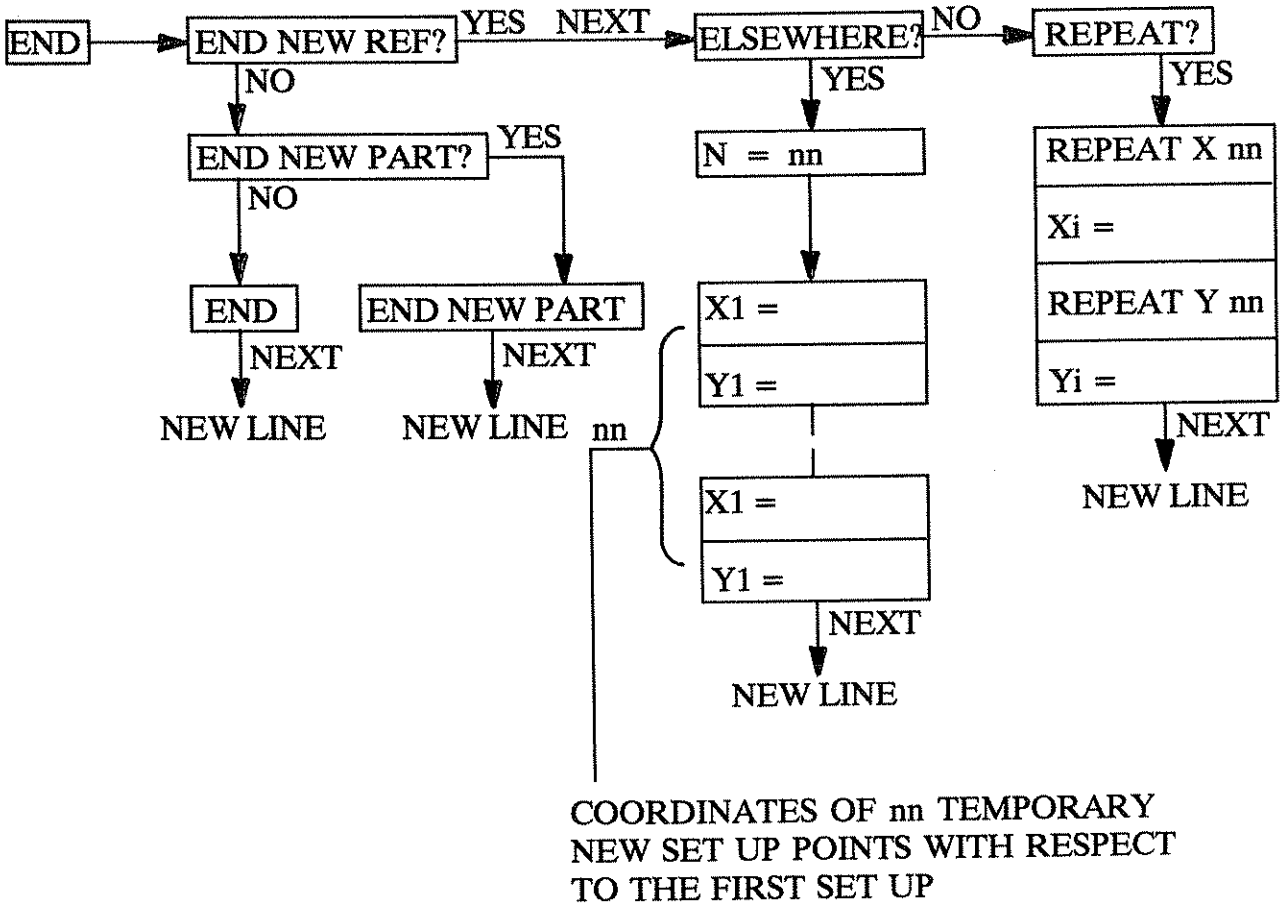

1) END This is the simplest (press NO key twice). When the controller executes this, the tool will return to the home position, Z up first, then X and Y. Touch any mode key to exit from program run mode. The display will stay at this instruction. To re-run go back to program start. The SET UP location is not stored so you will have to re - setup.

2) END NEWPART To "re - run" choose this ending (press NO,YES). When executed by the controller, the tool will go home, Z > Z MAX first, then X Y to home. It will check its position at home and the tool will then move in X and Y out to the original SET UP point in X and Y. The controller goes back to the SET UP instruction in the program.

The user can then insert a fresh part, press NEXT and the program will recycle or he can change temporarily (for this cycle) the SET UP position which will revert back to the original position on the next cycle.

3) END NEW REF The program can be replicated on the same work piece in two ways assuming that Z (=0) and Z CLEAR remain constant.

a)ELSEWHERE Here you enter nn (how many temporary new set up points you require all referenced from the original set up position) followed by the nn X and Y pairs of coordinates.

b)REPEAT The X nn is how many times along X and xi = the interval distance. Likewise for Y.

When the controller has exhausted all the elsewhere or the repeat pattern it assumes an END NEWPART final ending and executes this each time.

NOTE: THE ELSEWHERE AND REPEAT CONCEPT IS USED IN MOST OF THE FUNCTIONS.

7. RUNNING A SIMPLE PROGRAM

In the controller is now this program. Confirm by pressing

000	START INS 01		006	GO Z	-0.125
001	TD = .125		007	GO Y	2.0
002	FR XYZ = 10.0		008	GO X	3.0
003	SETUP > zcxyu		009	GO Y	1.0
004	GO X	1.0	010	GO X	1.0
005	GO Y	1.0	011	Z > C	
			012	END NEWPART	

the previous key if you are at line 013 in program enter mode and step back line by line, to line number 000. Go to program run mode. The display will ask nonstop ? press YES. If no it will ask single step? Answering YES will single step the instruction. The controller will stop at SET UP.

8. SET UP IN RUN MODE

The instruction is SET UP > zcxyu and the controller is waiting for your input. Press NO and the display will cycle one step, press again and again the axes will cycle. This is the selection process for choice of axis. Thus two NO's will give SET UP > xyuzc.
The jog keys now move the tool along the X axis. They are marked on the controller. The top two are for continuous jog, press to start, press to stop. The bottom two △↑,△↓increment .001" (.025 MM) or decrement the same amount at each key press.
Select a point on the part and move the tool to it along the X axis. Press the key SET UP REF. The x goes to big X indicating that you have SET SETUP on X. Press NO and do likewise for the tool along the y axis. Since there is no u axis (the rotary table), press NO again so the arrow is pointing at z c X Y u. Place the probe on the part and press for Z to come down on continuous jog. The tool tip should come down on the probe's circular button, go in, back out then come down very slowly to touch. The display will go from z to Z showing that Z SET UP has been set. The controller adds in the probe thickness to get the final Z set up point. Slide out the probe.

To set Z clear or C, press NO so the arrow points at c. Jog up on Z until the tool tip clears the part, then press SET UP REF key. Small c will go to big C.
At any time you can clear the set up point on an axis by touching the CLEAR key. It will de-capitalize the axis. Once capitalized you can still jog back and forth on this axis - the set up point is remembered. You can use the probe for set up by continuously jogging the tool diameter to the probe tip with the probe lying vertically against the workpiece, provided the controller knows the tool diameter.
Do not crash the tool in continuous jog. You will have to re-run the program from the beginning.
At any time during set up you can display the coordinate from the HOME position by pressing the DISPLAY key. Obviously you can precede the SET UP instruction with GO X and GO Y with these displayed values so the tool will move to the SET UP coordinates in X and Y and you will only have to SET UP z and c. You still have to capitalize X and Y. If you don't capitalize then the controller will default to the HOME position.
Once NEXT is pressed the controller will de-capitalize the letters but it will still remember the set up positions. Make sure the spindle is running before pressing NEXT. Usually SPINDLE ON/OFF instruction is added after SET UP but for the moment since the spindle is in LOCAL you have to turn if off and on.
As soon as the controller reaches END NEWPART, Z will go to Z max, X and Y will go HOME and return to the SET UP position. Check that the display shows the SET UP instruction. Change the part then press the NEXT key to re-cycle.

PART 2 OF MACHINE AND CONTROLLER

9. Polar coordinates r and a KEYS

10. Zeroing Coordinates, Zeroing AT KEYS.

11. > REF COODS and X Y > REF 0 KEYS.

12. Tool compensation and qualifiers inside (i) and outside (o).

13. Qualifiers Fast (f) and Comeback (c).

14. The move instructions GO and GR keys.

15. Polar coordinates with inside (i) and outside (o).

16. Examples of the geometry of the tool path.
    1. RECTANGULAR FRAME WITH CORNERS
    2. TRIANGULAR FRAME

17. The CS and CYCLE KEYS.

18. DWELL KEY.

19. DISPLAY KEY.

20. SPINDLE ON/OFF KEY.

21. HALT KEY - PROGRAM RUN EXIT AND RE-START.

22. TOOL CALIBRATION AND THE TOOL CHANGE KEY.

9. POLAR COORDINATES r and a KEYS

In the X Y plane we can represent a point P either by an X1, Y1 coordinate or in polar coordinates r and a.

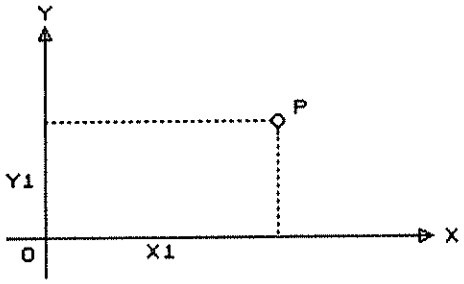

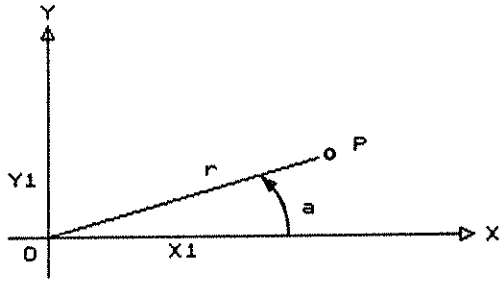

For doing arcs in the X Y plane we need polar coordinates.
The keys r (the radius) and a (the angle) are below the X Y Z keys on the keyboard, a is - for clockwise direction, + for counter clockwise. The entry is in degrees ± nnn.nnn the same as U, the rotary table. A zero must be established around which we can swing the arc and to do this we use a LOCAL ZERO. To set one we use the following instructions.

10. ZERO COODS AND ZERO AT KEYS

For ease of entering tool path coordinates and for centering of arcs we need the ability to create a LOCAL ZERO. All subsequent moves are referenced from this zero. Other LOCAL ZEROS can be set from the first local zero. It can be set in two ways.

ZERO COODS

This zeros the selected axis or axes AT THE CURRENT TOOL POSITION.
Press ZERO COODS KEY. The display will ask
ZERO AXIS ?
Enter any combination of X Y Z U you require zeroed.
Since it requires moving the tool tip to the requisite point this may not be convenient so instead use : -

ZERO AT

This zeros at the following coordinates location.
Press ZERO AT KEY. Display will show ZERO AT.
Press NEXT key. Press TWICE any one of X Y Z U r a and enter the value. Press the NEXT key again, then press TWICE the next coordinate, enter the value and so on.

EXAMPLE 1

Suppose you wanted to cut a rectangle 1.2 inches by 0.5 inches at a location 1,1 as shown. Move the tool to the lower left side

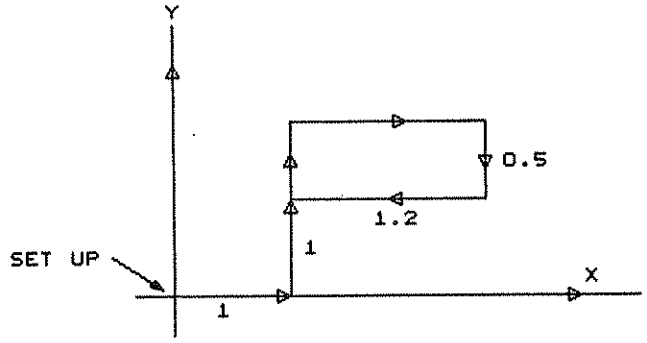

GO X 1.0 Go to the zero
GO Y 1.0

ZERO XY Set a LOCAL ZERO HERE
GO Z -.2
GO Y 0.5
GO X 1.2 CYCLE ROUND
GO Y 0.0
GO X 0.0
Z > Z MAX

EXAMPLE 2

You are at A, want to go to B and swing an arc round C of radius .75 . Do this

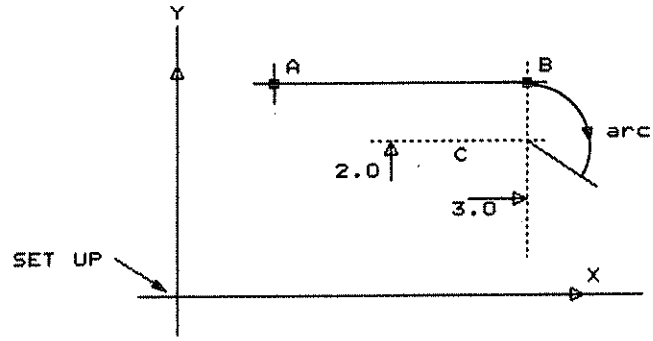

ZERO AT
x = 3.0 Zero at C
y = 2.0

GO r 0.75 Moves tool A to B
a 90.00

GO a -45 Cut arc.

11. > REF COODS AND X Y > REF O KEYS

These are one line instructions.
> REF COODS KEY. When you create a local zero to do tool moves around, you also need the ability to "UN ZERO" and to reference all subsequent moves to the SET UP (the original reference coordinates). This instruction will do it. There is no tool movement involved.
X Y > REF 0 KEY. This one line instruction MOVES the tool in X and Y to the SET UP point via the home positions in X and Y. It is used to confirm the X Y location particularly after very long or repetitive arc moves. It is a version of END NEWPART in x and y. Take care as these two instructions are easily confused.

12. Tool compensation and qualifiers. Inside (i) & Outside (o)

Sometimes it is necessary to make the tool path independent of the part geometry and dependent only on the tool diameter. Thus if the tool diameter is changed it is not necessary to recalculate the tool path instructions in the program. This is called tool compensation. The qualifiers to do this are called Inside (i) and Outside (o). They are added to the move instruction in single axis moves X,Y,Z and in various combinations in polar moves with r and a. Essentially in linear moves "inside" subtracts off half the tool diameter or tool radius from the move while "outside" adds on half the tool diameter or tool radius to the move. In angular moves the tool is placed on either side of the angle or radius or both.

13. Qualifiers Fast (f) and Comeback (c)

These can be added to the move instruction.

f FAST makes the move at maximum speed
c COMEBACK make the move and comes back.

14. THE MOVE INSTRUCTION GO ABS AND GO REL KEYS

The GO ABS or GO ABSOLUTE key means GOTO this coordinate. The instruction display as GO thus.

GO X 2.2	means goto the X coordinate 2.2
GO X 2.2 GO Y 1.3	means goto the XY coordinates (2.2,-1.3)
GO X 2.2 GO Y 1.3 GO Z 0.5	means goto the XYZ coordinate (2.2,1.3,0.5)
GO r 2.3 a 23.5	means goto the polar coordinates (2.3,23.5) (in the XY plane)

These are example of a single axis, two axes, three axes and two axes moves. The GO REL or GO RELATIVE key means FROM WHERE YOU ARE go THIS DISTANCE. It is displayed as GR thus.

GR Y 1.2	means move from here 1.2 positively in Y.
GR Y 2.3 Z -3.2	means move from here 2.3 in Y and -3.2 in Z simultaneously
GR X -0.1 Y +0.2 Z -0.3	means move from here -0.1 in X +0.2 in Y and -0.3 in Z simultaneously

GR r 2.0	means move from here 2.0 along r (angle a remains constant)
GR a 23.0	means move the tool in an arc 23 degrees clockwise from where you are. (radius r remains constant)

Again you have a single axis, two axes, three axes and two, two axes moves. In the examples above each axis selected if two or more, must be pressed TWICE to enter it into the controller.
THE QUALIFIERS inside i, outside o, comeback c, fast f only apply to single axis moves in X Y Z. Thus : -

GO c X 2.2	Means go and comeback to coordinate 2.2 in X
GO f X 3.2	Means go 3.2 fast from where you are in X.
GO i Y 1.2	Means go to coordinate (1.2 - tool radius) in Y.
GO o Z 3.2	Means go (3.2 + tool radius) in Z from where you are.

For the U axis only c and f apply.

15. QUALIFIERS WITH POLAR MOVES

The qualifiers Inside i, Outside o can be used in polar moves. With r and angle a to position the tool correctly. There are nine possibilities : -

Thus point 1 is given by

GO o r
GO o a

point 2 is given by

GO i r
i a

point 3 is given by

GO o r
GO i a

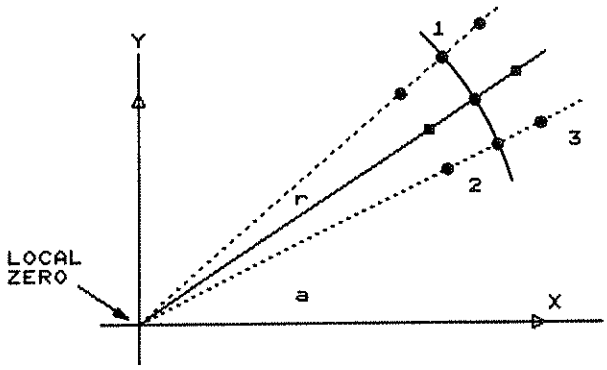

The controller calculates the "tool radius angle" and adds or subtracts it if required.

16. GEOMETRY OF TOOL PATH

Most of the geometry in the X Y plane consists of connecting lines to lines, lines to arcs and arcs to arcs. The tool moves are generally outside the contour or inside and provided there is sufficient information on the drawing it is fairly easy to write down the tool path. However we have seen triangles in which the sum of the interior angles do not equal 180, closed contours in which the total rotation of the tool swing does not equal 360 and very insufficient information on blend radii centers.
Care is needed in selecting cartesian or polar coordinates in making tool moves as the following examples will show.
For more complex geometries involving three axes moves the calculations can only be done with a CAM program and since we use three lines per point you can rapidly generate 25000 lines on some shapes.

EXAMPLES 1 RECTANGLE FRAME WITH CORNERS

Cut out a rectangle with corners of radius .25
Rectangle is 1 by 2. Depth is .05
The required tool path is shown in dotted lines.
First locate the local zero around which we swing the arcs.
The first arc's center is at (.5,.5) so after SET UP we do this.

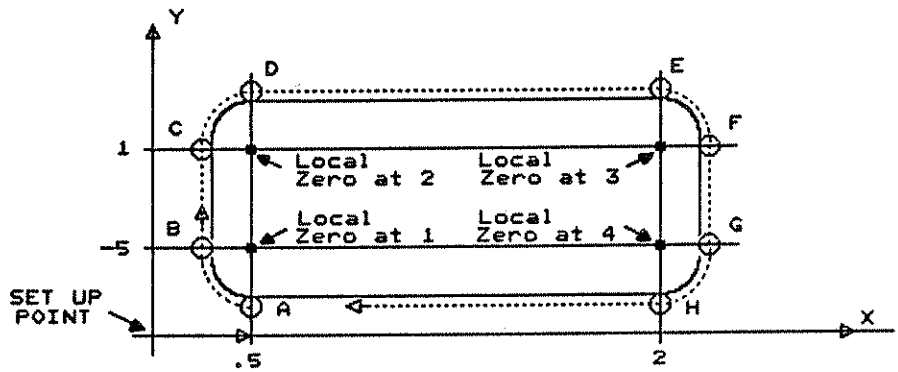

ZERO AT (1)
X = .5
Y = .5

GO o r .25 Move tool from SET UP to A.
a 270

Drop the tool GO Z -.05 in at A
Swing the arc GR a -90 to B
Switch back to old coordinates

> REF COODS

ZERO AT (2)
X = .5
Y = 1.0
GO r o .25 Moves tool from B to C
a 180

Swing the arc GR a -90 to D

```
> REF COODS

ZERO AT          (3)
  X = 2
  Y = 1
GO  o r .25      Moves tool to E
        a  90
GR    a - 90     Moves tool to F

> REF COODS

ZERO AT          (4)
  X = 2
  Y = .5
GO  o r .25      Moves tool to G
        a  0
GR    a  -90     Moves tool to H
GR  X  -1.5      Moves tool to A

Z  >  Z MAX      Raise the tool.
```

This path is independent of tool diameter. It is really an arc to arc set of moves.

EXAMPLE 2 TRIANGULAR FRAME

Cut out a triangle of base 2 altitude 1.
After SET UP zero at A

```
ZERO AT
  X = 0.5
  Y = 0.5
```

Position tool at the bottom of the hill

```
GO  o r  0.0
         a  116.57
```

Drop the tool

```
GO    Z  -0.5
```

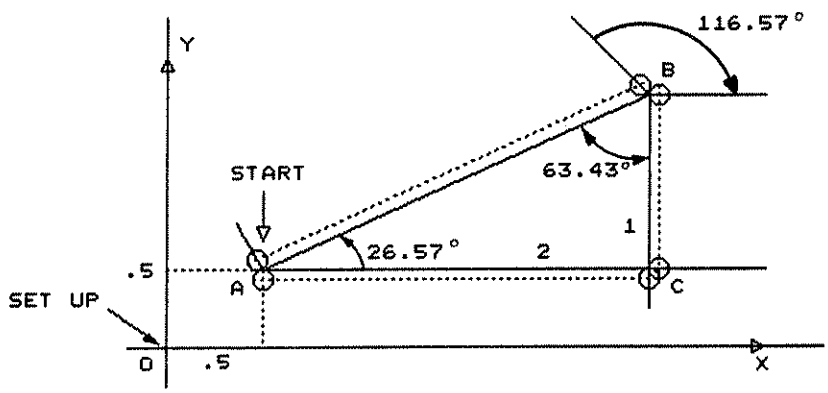

RE ZERO WITH RESPECT TO THIS ZERO AT B

ZERO AT
r = 2.24
a = 26.57

Move the tool up the hill to B

GO o r 0.0
a 116.57

Swing the tool round on the B point so it is set to go B to C

GR a -116.57

RE ZERO ON C WITH RESPECT TO ZERO AT B.

ZERO AT
r = 1
a = 270

Move the tool from B to C

GO o r 0.0
a 0.0

Swing the tool round on C 90 degrees

GR a -90.0
GR x -2.0 Moves tool from C to A.

Z > Z max

Again the path is independent of the tool diameter. It is not necessary of course to put in the qualifiers if the tool diameter is fixed.
In many cases it much simpler to think in terms of polar moves instead of cartesian coordinate moves.

17. THE CS KEY and the CYCLE KEY instruction

Many parts exhibit symmetry which may be exploited by these two instructions. You have to zero in the center of the part.

CS KEY

Simply means change sign of either X or Y or Z and go there.
If the tool tip is at x = 2, the instruction

CS X

Will move the tool to x = -2.
To cut a rectangle, zero at the center, drop the tool at one corner then use

CS X
CS Y
CS X
CS Y

to cut each side.

CYCLE KEY

Displayed as CYCLE XY, this instruction combines the four instructions above to generate a complete "rectangular" move. Depending on which corner the tool is dropped the rectangular move is either clockwise or counter clockwise. Sliding in along a diagonal and repeating this instruction will generate a pocket rectangle.

18. DWELL KEY

Display will show DWELL nn. Enter 01, 02, etc for seconds of required dwell time.

19. DISPLAY KEY

This instruction DISPLAY (X) (Y) (Z) (r) (a) can be put in anywhere and as many times as required. It will display the current value of the selected axis or axes. It is useful for debugging programs.

20. SPINDLE OFF / ON KEY

When pressed the display will show SPINDLE OFF.
To change to SPINDLE ON press + / - key. These instructions should be put in after the program is working (after SET UP - SPINDLE ON, before END NEWPART - SPINDLE OFF and where necessary around a TOOL CHANGE instruction). Before running a program with these instructions, switch the spindle PROGRAM / LOCAL to PROGRAM, turn the spindle ON and then set the rpm adjust.

21. HALT KEY PROGRAM RUN EXIT & RE START

At any stage you can put in a HALT instruction. This halts the controller in program run. To continue, press the NEXT key. If the HALT KEY is pressed during program run, the controller will halt after it has finished the current instruction, or function.

In both cases in halt, you can exit the program run mode to any other mode (e.g. change an instruction in program enter mode) go back a few lines and press program run again. Functions (canned routines) should always be restarted at their beginning. You can also go forward to END or END NEWPART and program run from here. This will recycle to SET UP which can also be exited by pressing HALT to allow program modification. Restart at SET UP with program run. Care should be exercised in this. Exiting from local zeroes and repeat loops can lead to problems in re-starting.

22. TOOL CALIBRATION AND THE TOOL CHANGE KEY

For multiple tools in one program you need to calibrate them first before running the program. Calibration means measuring the Z differences (or offsets) in height - each one from TOOL 1. TOOL 1 is used in the SET UP and so the difference in height is automatically factored in when TOOL 2, TOOL3 etc. is called up in the program to a maximum of 8 TOOLS. The offsets are stored in the controller until changed.

To load them in, put in TOOL 1 and place the probe on a flat surface under the tool. Go to MANUAL mode, answer YES to TOOL CALIB?, NO to PROBE. TOOL 1 will be displayed. Press NEXT and TOOL 1 will descend to touch the probe then the display will show TOOL Z. Press NEXT again and the Z axis will go up to display TOOL 2. Put in TOOL 2, press NEXT and the tool will descend to touch the probe. The display will change to TOOL Z. Press NEXT and it will go up again and display TOOL 3. To exit from this, press HALT if less than 8 TOOLS.

If any tool breaks during a program ALL the tools have to be re-calibrated from TOOL 1 again - when the new tool replaces the broken one.

To enter a tool change instruction press the TOOL CHANGE KEY. Answer YES to the display TOOL n? then enter the desired number. E.G. TOOL 3.

It should be preceded by a spindle OFF instruction, followed by a spindle ON instruction, followed by a TOOL DIAMETER instruction.

During program run, the program stops, the spindle is raised and you insert the correct TOOL number. Press NEXT to continue running the program.

PART 3 OF MACHINE AND CONTROLLER

23. PROGRAM CONTROL INSTRUCTIONS

    1) SKIP TO KEY
    2) SUBROUTINE, SUB RETURN, CALL KEYS
    3) REPEAT, REPEAT END KEY

    EXAMPLES
    1. DRILL PECK
    2. X Y HOLE PATTERNS
    3. RECT. FRAME
    4. RECT. POCKETING
    5. ARC POCKETING
    6. CUTTING A POLYGON
    7. CUTTING A CAM
    8. Generation of a pyramid and cone
    9. HELICAL THREAD CUTTING

    4) PROG REF KEY

24. EXTERNAL CONTROL 1,2,3 CONTROL KEY

25. THE FUNCTION KEY ------ SCALE ON/OFF.

26. THE CANNED FUNCTIONS.

    HOW THEY OPERATE
    1. MILL KEY
    2. RECT. FRAME KEY
    3. RECT POCKET KEY
    4. CIRCLE POCKET KEY
    5. DRILL KEY
    6. BOLT CIRCLE KEY
    7. ARC FRAME KEY
    8. USING PROG REF FOR THE CANNED FUNCTIONS

23. PROGRAM CONTROL INSTRUCTIONS

These instructions are used to 'control' the controller when it is running a program.

1) SKIP TO KEY

When entered it becomes SKIP TO nnn, where nnn is the line number. When the controller comes to this instruction it will jump to this nnn line number and continue running from there. It is useful in endlessly cycling the machine.

2) SUBROUTINE KEY, SUBROUTINE RETURN KEY AND CALL KEY

These three keys are instructions which tell the program to go to a specific section of the program, execute that section and then return to continue the program.
Very often in long programs a particular operation is repeated many times. For example, the user might wish to write his own drill and peck routine, a set up routine, a tool change routine or some particular geometry that is to be repeated elsewhere. It is a severe imposition to have to repeat these instructions throughout the program, hence subroutines :
This section is written as:

```
SUB   n n          (00 > n > 99)
_ _ _ _
_ _ _ _            OPERATION
_ _ _ _

SUB RETURN
```

and can be put anywhere in the program space (000-900 line number).
Subroutines are usually placed at the end of the program space. When the user wishes to call this subroutine in his main program he puts in :

```
CALL SUB    nn
```

The controller will branch to this subroutine during execution, execute it, then return to begin executing the next statement of the program.
There is no restriction on the number of nesting levels, i.e., subroutine which can call other subroutines.
Here is an example of how they are used. Suppose the user wanted to mill characters (A,B,C, etc.). Let us use a 1/16" DIA MILL and let us make the characters .34" high by .23" wide. We have scaled up the characters (X10) to illustrated the moves per character. By inspection one can enter the move coordinates.

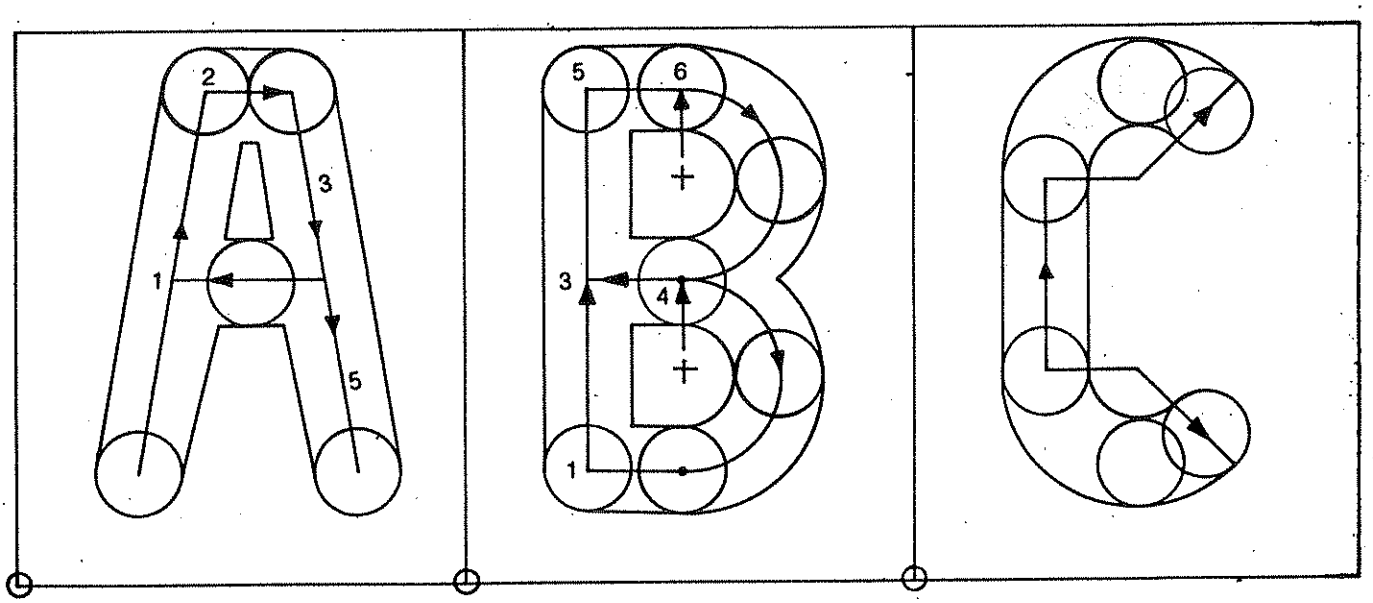

LOCAL ZERO for A LOCAL ZERO for B LOCAL ZERO for C

SUB 01

```
ZERO XY
GO    X    .04
      Y    .05
GO    Z   -.05
GR    X    .05
      Y    24
GR    X    .03
GR    X    .025
      Y   -.12
GR c  X   -.08
GO    X    .13
      Y    .05
Z > C
GO    X    0.0
      Y    0.0
> REF COODS
SUB RETURN
```

SUB 02

```
ZERO XY
GO    X    .05
      Y    .05
GO    Z   - .05
GR c  X    .07
GR    Y    .12
GR c  X    .07
GR    Y    .12
GR    X    .07
ZERO AT
      X    .07
      Y    .24
GR    a   - 180
ZERO AT
      Y   -.12
GR    a   - 180
Z > C
GO    X   -.12
      Y   -.11
> REF COODS
SUB RETURN
```

SUB 03

```
ZERO XY
ZERO AT
      X    .12
      Y    .22
GO    r    .07
      a    45
GO    Z   -.05
GR    a    135
GR    Y   -.10
ZERO AT
      Y   -.10
GR    a    135
Z > C
GO    X   -.12
      Y   -.12
> REF COODS
SUB RETURN
```

Each of the above subroutines will mill a specific character. If we now wish to lay out the characters as shown in the example, then the main program would look like this.

```
000   START INS  04
001   TD =  .0625
002   FR  XYZ = 10.0
003   SETUP  >  zcxyu
004   GO  X  .10          Go to bottom LH side of
005       Y  .0           1st character
006   CALL SUB  01        Do the "A"
007   GR  X  .23
008   CALL SUB  02        Do the "B"
009   GR  X  .23
010   CALL SUB  03        Do the "C"
011   GR  X  .46          SPACE
012   CALL SUB  01        Do the "A"
013   GR  X  .23
014   CALL SUB  02        Do the "B"
015   END
```

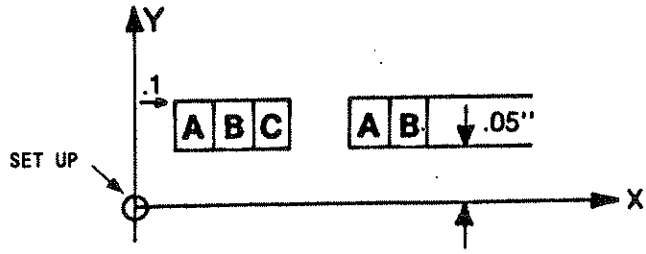

Observe that in each subroutine we immediately set a local zero and do all moves with respect to it. When we exit we go to the local zero then switch back to the REF COODS so the main program can locate the characters where it pleases.

3) REPEAT REPEAT END KEYS

These keys are instructions which permit the program to repeat any section of a program a specified number of times, from 1 to 99. This is done by enclosing the section of the program by REPEAT nn and terminating it by REPEAT END. For example:

```
REPEAT 20
-- -- -- -- --
-- -- -- -- --
OPERATION
-- -- -- -- --
-- -- -- -- --
REPEAT END
```

will repeat the operation 20 times.

These REPEATS can be nested to any level, providing there is always a REPEAT END for each REPEAT nn. For example all of these are valid.

```
REPEAT  10
    REPEAT  20
        REPEAT  60
        REPEAT  END
    REPEAT  END
REPEAT  END
```

In this example, the operations in the center are repeated 60 x 20 x10 (=12000) times. This instruction is extremely useful in many applications. For example in pocketing and framing, we repeat the operation each time incrementing Z which in turn is repeated in the X & Y axis.

EXAMPLE 1 DRILL PECKING

Suppose the user wishes to write his own drill routine with small pecks. We shall write it as a subroutine with a REPEAT in it. The main program would be...

MAIN PROGRAM

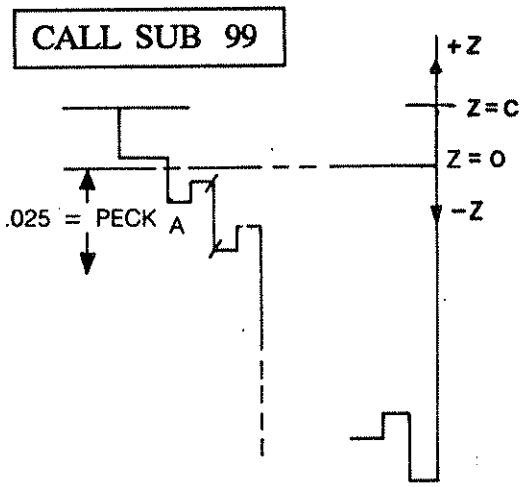

SUBROUTINE

```
SUB        99
GO f  Z   .0050
GO    Z  -.0250
REPEAT  09
GR f  Z  +.0100      Clear drill
GR    Z  -.0100
                     GO up down ten thous
GR    Z  -.0250      drill pecks
REPEAT END           Loop 9 times
Z > C
SUB RETURN
```

In this example the A total depth is .025 + 9 x .025 = .25"

EXAMPLE 2 X,Y HOLE PATTERNS

Now suppose we wish to use this in a 20 x 20 hole pattern in the XY plane. The program would be :

```
000   START INS  05
001   TD =       .0625
002   FR  XYZ    15.0
003   SETUP  >  zcxyu
004   GO    X  .1000
005         Y  .1000
006   REPEAT     20
007   REPEAT     20
008   CALL SUB   99
009   GR    X  .1000
010   REPEAT  END
011   GO    X  .1000
012   GR    Y  .1000
013   REPEAT END
014   END
```

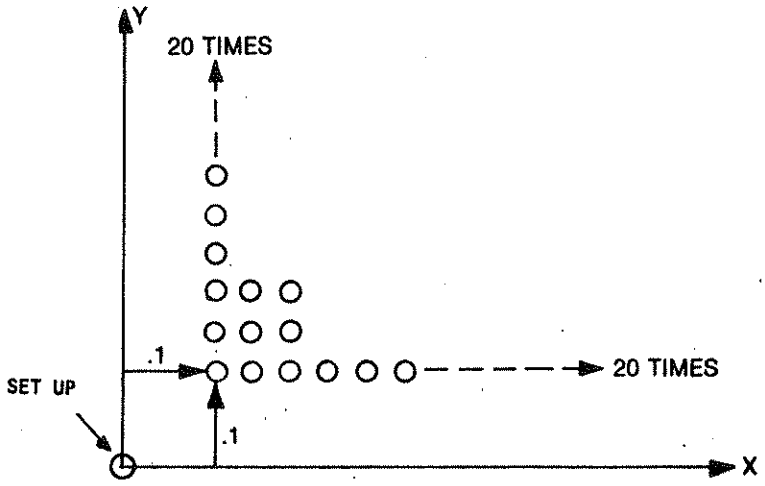

EXAMPLE 3 RECTANGULAR FRAMING

Another example is the use of REPEAT / REPEAT END in frame cuts. You cycle round, increasing Z each time on the repeat.
Here is an example of a simple rectangular frame cut. The material is .25" thick and the tool is .125" in diameter. Each pass we lower Z the desired increment.

```
000   START INS  06
001   TD = .125
002   FR  XYZ = 10.0
003   SETUP  >  zcxyu
004   ZERO AT              Zero at center
005     X    1.5000        of rectangle
006     Y    1.5000
007   GO o  X -1.0000
008         Y -0.5000      Go outside of rectangle-Lower LHS
009   GO    Z  0.0000      Lower tool to surface
010   REPEAT     05        Do 5 passes
011   GR    Z  -.0500      each of 50 thousands
012   CYCLE  XY            Cut rectangle
013   REPEAT END
014   END
```

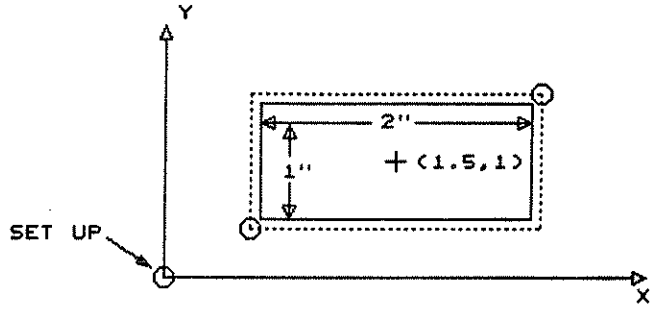

This is exactly how the FRAME function works. For more complex geometries the cycle XY instruction (line 012) is replaced by the move statements necessary to cut the required geometry.

EXAMPLE 4 RECTANGULAR POCKETING

Pockets can be made by doing successive frame cuts. Each frame is made smaller until the center is reached. This is an ideal situation for a REPEAT instruction.
Suppose we wish to mill out a pocket 1" x .5" to a depth of .1" with a .125 dia tool as shown below

```
000   START INS  06
001   TD = .125
002   FR XYZ = 10.0
003   SETUP > zcxyu
004   ZERO AT
005     X    .7000        Zero at center
006     Y    .4500        (of rectangle)
007   GO i  X -.5000
008         Y -.2500      Go to lower LHS side
009   GO    Z -.1000      Drop tool
010   REPEAT   03         Repeat 3 times
011   CYCLE   XY          Cut frame
012   GR    X  .1000      Reduce frame size
013         Y  .1000
014   REPEAT END
015   END
```

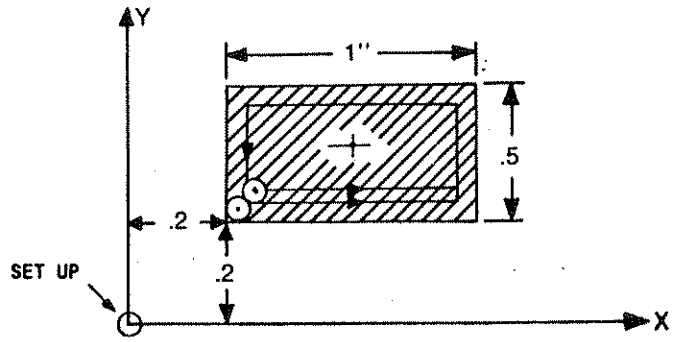

How did we set the repeat at 3 ? This hinges on the size of the frame reduction (lines 012 and 013) and hence the size of the XYcut. It is usual to allow some of the tool diameter to be outside the cut to clean up the previous cut so we moved the tool in .1" (not .125). Now the critical dimension is .25, the distance from the X edge of the rectangle to the center. This is the shortest, so 3 frames of .1 will cover 2.5.
In the previous example the depth is .1", suppose we had wanted a depth of .3". We simply repeat on the Z increment.

```
000   START INS  06
001   TD = .125
002   FR XYZ = 10.0
003   SETUP > zcxyu
004   XERO AT
005     X    .7000
006     Y    .4500
007   GO i  X -.5000
008         Y -.2500
009   GO i  X -.5000      Drop tool to surface
010   REPEAT     03
011   GR    Z -.1000      Increment Z into wor
012   REPEAT     03       On each pass
013   CYCLE      XY
014   GR    X -.1000      3 passes
015         Y -.1000
016   REPEAT END
017   GO i  X -.5000
018         Y -.2500
019   REPEAT END
020   END
```

The function rect. pocket does essentially the above program. It calculates the repeat n's based on Z% and XY%.

EXAMPLE 5 ARC POCKETING

Arc pocketing is done similarly. Suppose we wished to pocket an arc 90 degrees on a radius of .60", with a 1/8 inch dia mill, to a depth of .1". We shall move the tool along the radii to clean up the tool cuts.

```
000   START INS  07
001   TD = .125
002   FR  XYZ  10.0
003   SETUP > zcxyu
004   GO    X  .8000
005         Y  .2500
006   ZERO  XY
007   GO    Z -.1000
008   GO i  r  .6000
009   GO    a  90.000
010   GO    r  0.0000
011   GO    r  .5000
012   REPEAT     02
013   GR    a  90.000
014   GR    r -.1000
015   GO    a  0.0000
```

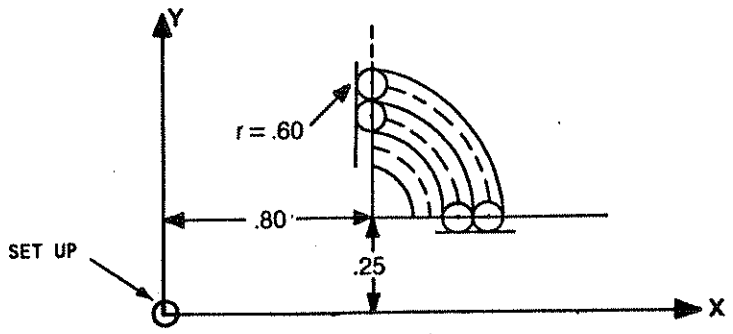


```
016   GR    r -.2000
017   REPEAT END
018   END
```

EXAMPLE 6 CUTTING A POLYGON

The object is to cut a polygon with 17 sides and radius 1 inch. It illustrates the use of the instruction.

GR	r
	a

The program becomes:

```
000   START INS  01
001   TD = .125
002   FR    XY =  10
003   FR    Z  =  6
004   SETUP > zcxyu
005   GO    X  2          Zero at center 2,2
006         Y  2          from SETUP point
007   ZERO  XY
008   GO    X  1          Go to start of
009   GO    Z  -.050      polygon drop tool
010   REPEAT     17
011   GR    r  0.000
012         a  21.176
013   REPEAT END
014   Z > C
015   END
```

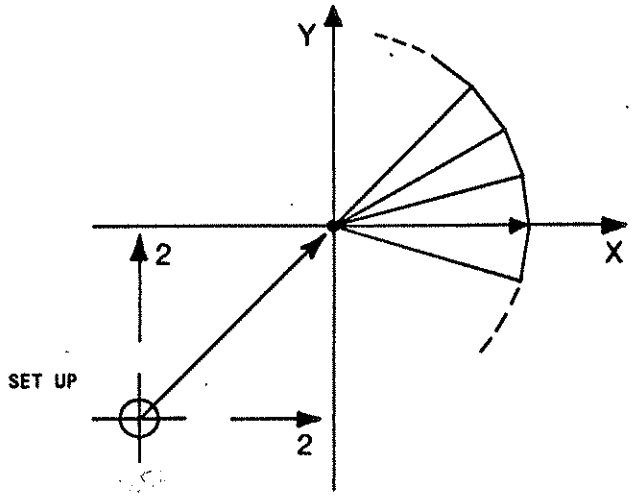

EXAMPLE 7 CUTTING A CAM

The object is to cut a cam. The radius of the cam is 1 inch at 0 degrees going to 0.9 inches at 180 degrees. Therefore the radius is reduced by 0.1 inch over 180 degrees. We have to decide on the decrement for r. Fix it at 0.0004 and find the angle.

No. of steps is (.1) / (0.0004) = 250

So the angle increment is 180 / 250 = 0.72 degrees

Thus we take 250 steps increasing "a" by 0.72 degrees and decreasing r by .0004 each time.

The program becomes:

```
000   START INS  01
001   TD = .125
002   FR XYZ =  10
003   SETUP > zcxyu
004   GO    X  1.0625
005   GO    Z  -.050
006   REPEAT     10
007   REPEAT     25
008   GR    r  -.0004
009         a  .72
010   REPEAT END
011   REPEAT END
012   Z > C
013   ENDN
```

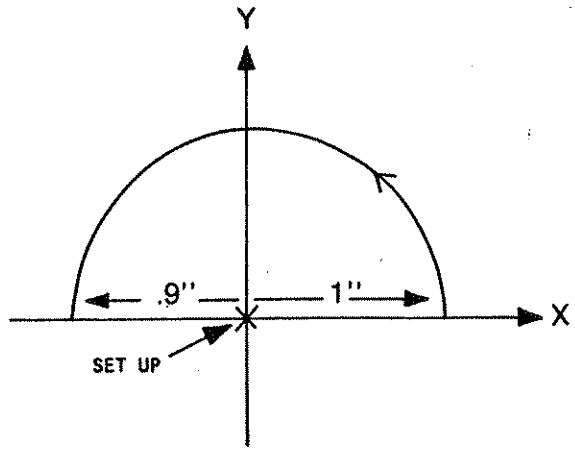

EXAMPLE 8 GENERATION OF A PYRAMID AND CONE

Here are two example that illustrate the generation of 3D shapes by little vector moves.

1. To generate a Pyramid

The program becomes:

```
000   START INS  01
001   TD = .125
002   FR XYZ =  10.0
003   SETUP > zcxyu
004   GO    r  0.135
005         a  -30
006   REPEAT     42
007   GR    Z  -.0005
008   GR    r  .005
009   REPEAT     03
010   GR    r  0.0
011         a  120.0
012   REPEAT END
013   REPEAT END
014   END
```

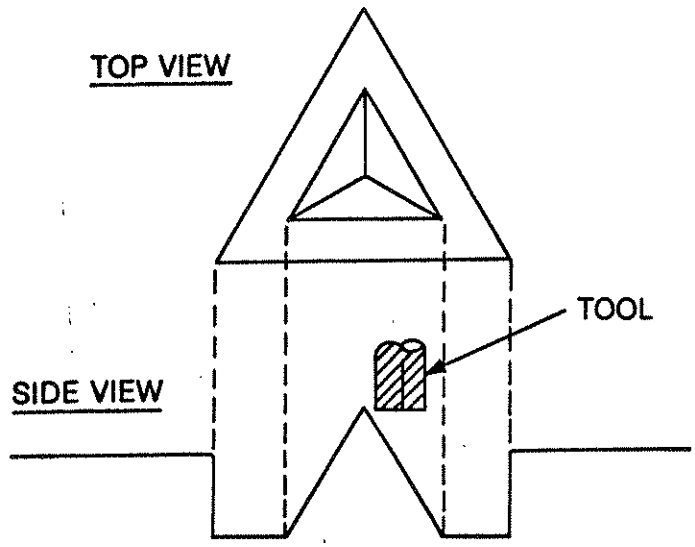

2. To generate a Cone

The program is:

```
000   START INS  01
001   TD = .125
002   FR XYZ =  6.0
003   SETUP > zcxyu
004   GO    X  0.0625
005   GO    Z  0.0
006   REPEAT     42
007   GR    Z  -0.0005
008         X  0.005
009   GO    a  360.00
010   REPEAT END
011   END
```

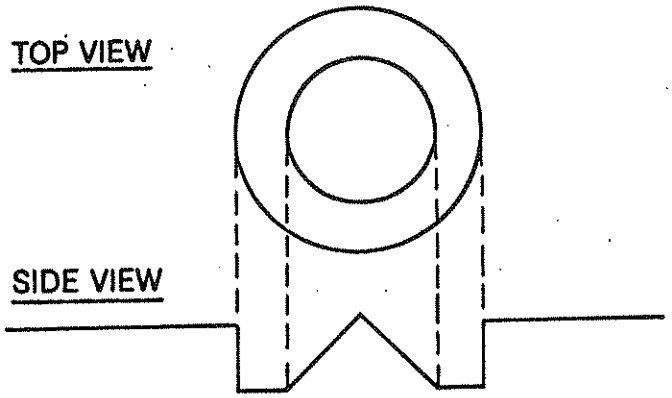

EXAMPLE 9 HELICAL THREAD CUTTING

Any thread can be cut, externally or internally. You need a carbide insert that matches the required thread, locked in a boring tool. Multiple thread cutting tools are also available and this reduces the number of turns required to cut the helix. Essentially the procedure is to spin the boring tool and move it radially round in a circle in small angular increments dropping Z as well in small increments such that one turn is equivalent to the pitch of the thread. The tool chips out the thread cross section. Thus a pitch of .1 means Z is dropped .1 in 360 degrees, or .0025 every 9. This becomes the inner repeat loop. So you have :

```
Zero at
  X     2.0          Zero at the top of the cylinder
  Y     2.0
  Z     .6
GO    Z  .65         Move tool to starting position
GO    r  0.5
      a  0.0
GR    r  -.02
REPEAT 5             Make 5 threads
REPEAT 40            Cut 1 thread 360
GR    a  9
GR    z  -.0025
REPEAT END
REPEAT END
GR    r  +.2         Move tool out
GO    Z  0.0
REPEAT END
```

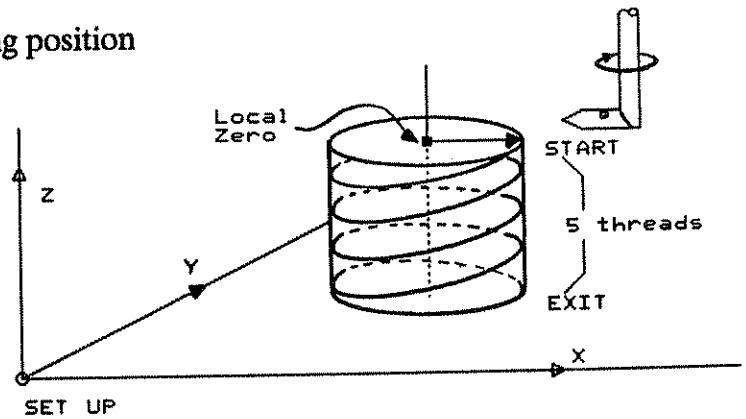

4) PROG REF. KEY

This key is an instruction which takes the current position of the tool center and makes that position the SET UP point for X and Y. Up until now the only mechanism to set this point has been through the SET UP key. This involves manual intervention by the operator which in some cases may be good while in others onerous. For example, it allows the user to do this:

```
000   START INS  02
001   TD = .125
002   FR  XYZ   10.0
003   GO    X  .1000
004         Y  .1000
005   GO    Z 2.0000
006   HALT
007   PROG REF          set SET UP point at (.1,.1) in space
008 .....
```

The user MOVES the part to this location point for his SET UP, then clamps it in the jig. The halt can be removed later. The next time the program is run, it will go non-stop. This pre-supposes tool length etc. remain constant.
It also allows the user global program repeats. Just before the end tool is moved to the new SET UP POINT and is set by PROG REF, we then REPEAT the whole program.

24. THE CONTROL KEY

Pressing the control key, the display will show control n. Selecting : -

CONTROL 1 Will activate the buzzer for 5 seconds.

CONTROL 2 / 3 Are for external event operation for example in an indexer or cim cell.

On the right side of the power pack you will see a connector marked SYNC I / O. It is a standard female 5 pin audio one made by SWITCHCRAFT.

CONTROL 2 Sends an active low pulse for 100 msecs and continues on in the program.

CONTROL 3 Controller waits until it sees an active high for 30 msecs then continues on in the program. Internally both signals are opto isolated like so : -

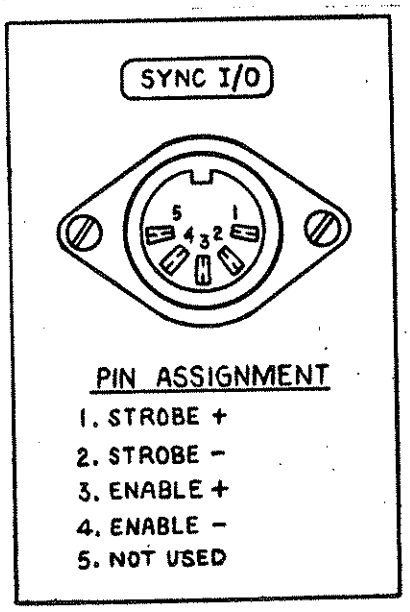

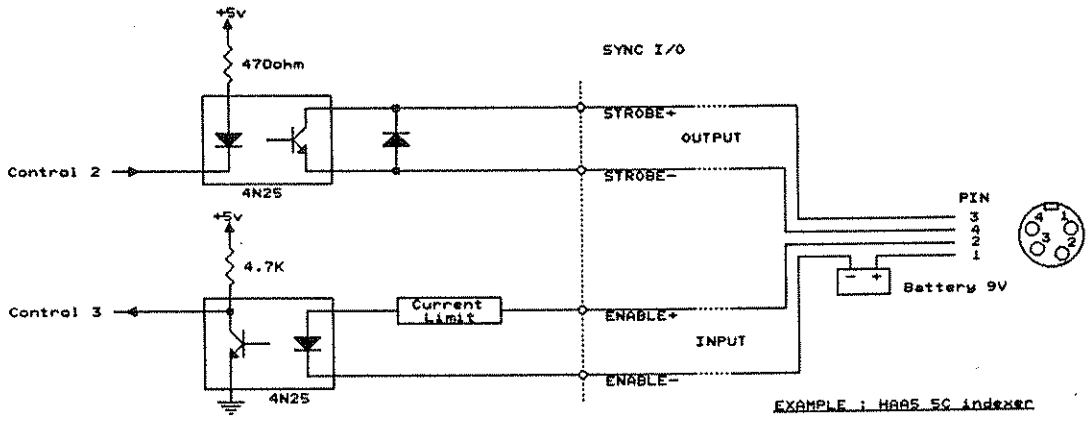

It is usually neccessary for the user to supply an external power supply 5v to 24v to activate the signals. Do not use the machine's internal ones.

CONTROL 4 Used to turn the coolant on and off if the switch at the coolant plug is in program and switched to ON at the control panel. A control 4 at the start of the program will turn the coolant on, another xontrol 4 at the end will turn it off. Coolant OFF at the control panel will turn it off.

25. THE FUNCTION KEY : SCALE ON / OFF

Touch the FUNCTION KEY and enter 00. Scale is function 00. It is a linear scaling on X,Y,Z or any combination of them either up or down and is used as a switch like SPINDLE ON/ OFF. All move statements between SCALE ON and SCALE OFF which involve the scaled axis or axes will be scaled.

To set SCALE	SCALE ON	
	(X x.xxxx)	
	(Y y.yyyy)	( ) = OPTIONAL
	(Z z.zzzz)	

For example scaling XYZ = 1.5 will produce a part 1.5 times the programmed dimensions. Where the values entered are the scaling factors. If fractional then the axis is scaled down, if greater than 1 then the scale is up.

Caution - The scale function must be turned off at the end of a program enter Function 00 Answer No to Scale on, enter which axis to Scale off.
Obviously you can only scale up to the extent that the maximum move on that axis is not exceeded. When using SCALE ON, SCALE OFF, SCALE ON, SCALE OFF... in a program sequentially it is necessary to return the tool to the SCALE ON LOCATION before turning SCALE OFF to allow the controller to re establish its position.

26. THE CANNED FUNCTIONS

These are pre programmed to do certain operations like a circle pocket for example that greatly simplify program entry. They can be located anywhere in the program and the only caution in their use is that all the geometry must be referenced from the SET UP point. When entered all previously set local zeroes are cleared and on exit any set within the function are also cleared. When the key is pressed there will be certain questions asked and to explain them here is a short summary.

F ?	Answer YES or NO to finish cut request. If YES then there will be left 0.0064 inches in X Y, or Z which will be cleaned out on a final pass.
i ?	Asks inside? meaning the tool path is inside the pattern requested. If NO, display will change to 0? meaning outside. If NO again then display will change to blank? meaning ON THE LINE. You must answer YES to one of these 3 questions before proceeding.
Z% nnn	The distance Z is dropped on each pass expressed asa percentage of the tool diameter. Thus 050 means 50% , 100 means 100% , 200 means 200% . If the tool diameter is 0.25 then Z% 050 means the tool will be dropped 0.125 on each pass.
Zd = ?	Total depth of cut in the Z axis relative to Z = 0 the SET UP point. Requires a numeric entry.
ZH = ?	Normally zero. If however you have a circle pocket (for example) within a circle pocket then you would like to start this circle pocket a depth ZH from the origin. This offset ZH corresponds to Zd in the first pocket. ZH is - below surface (Z = 0). + above the surface.

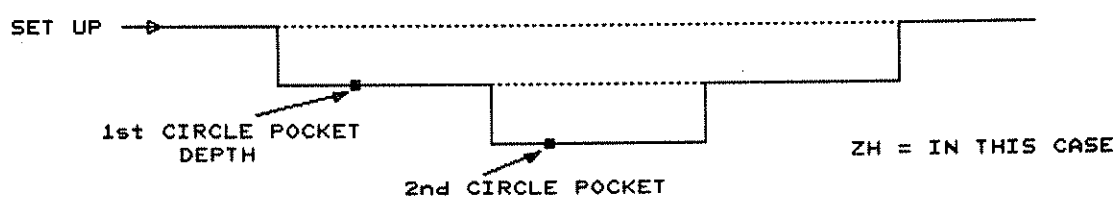

XY CUT % nnn	To the amount of horizontal cut in X and Y on each pass of a pocket mill and is always expressd as a percentage of the tool diameter. For example 050 means that 50% or half the tool will be in the work in the XY plane.
X1 = ? Y1 = ? XA= ? YB= ? etc.	These ask for the distances in X and Y from or of a specific geometry. Always refer to the function description following.

ELSEWHERE? This question appears at the end of a function. It permits the replication of the geometry defined by the funcion above it in another location on the work piece. A YES response to it results in additional questions for the coordinates of the new location.

REPEAT ?
REPEAT X nn
REPEAT Y nn

This always follows the ELSEWHERE? above. It permits the replication of the geometry defined by the function above it on a regular X Y grid. A YES response to it results in additional questions which ask for how many times the geometry is to be replicated in the X Y axes and the increment spacing between the geometries in each axis is determined by Xi or Yi.

NOTE :

1) Elsewhere moves the function to a new location. At each location you have the option to repeat it in X and Y.
2) To CLEAR a function during ENTRY mid way along requires that you continue entering values until the function is finished, then go back to start of the function and press clear sequentially until the controller asks CLEAR ?. Answer YES and the entire function is cleared out.
3) After the function is entered you can go back and change values in a particular line by pressing clear and entering the new values.
4) If you call up a new function which is longer than the one cleared you may over-run into a following function. The only way to clear it out is to go to LINE mode and clear between line numbers.

26.1 MILL FUNCTION

This function mills a slot from point (X1,Y1) to point (X2,Y2) on the XY plane. The slot can be inside the points, outside or on the points. It will cycle back and forth with each Z increment a percentage (Z% nnn) of the tool diameter until Zd is reached. The width is the tool diameter.

The ENTRY FORMAT is: -

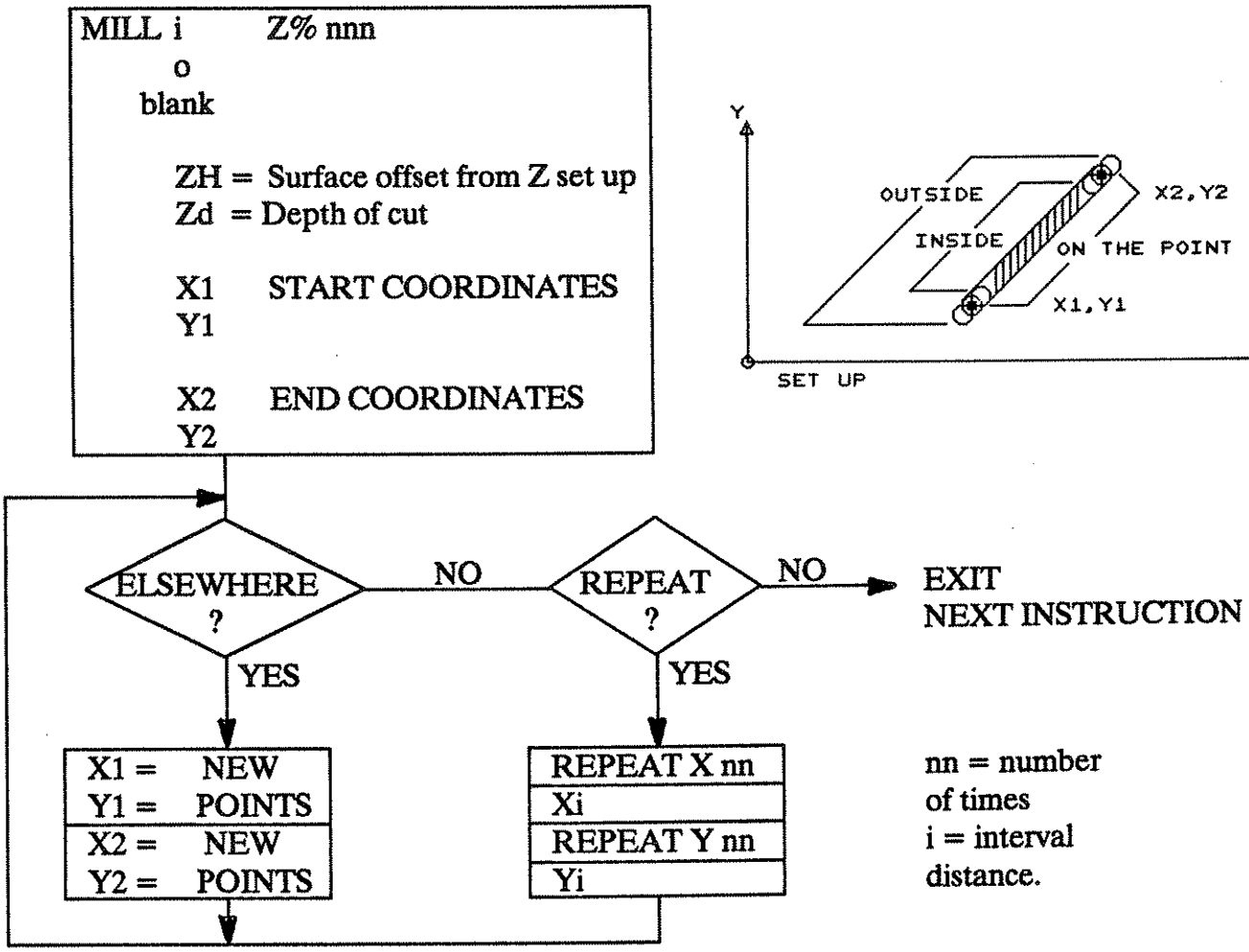

EXAMPLE OF MILL

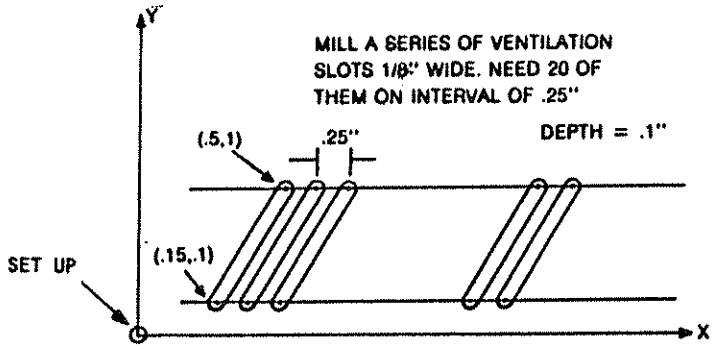

The program using MILL would appear as:

```
000   START INS  01
001   TD  = .125
002   FR  XYZ =   10.0
003   SET UP  >  zcxyu
004   MILL  Z%   050
005   ZH = 0
006   Zd =  .1
007   X1 =  .15
008   Y1 =  .1
009   X2 =  .5
010   X2 =  1.0
011   REPEAT  X  20
012   Xi =   .25
013   REPEAT  Y  00
014   Yi =   0
015   END
```

26.2 RECT FRAME FUNCTION

This will cut a rectangular frame in the XY plane. The cutting can be Inside (i), Outside (o) or on the frame (blank). If a finish cut (F) is specified then a remainder is left of 0.0064" which is cleared out by a final pass. A climb cut is made inside (counterclockwise) or outside (clockwise).

The ENTRY FORMAT is : -

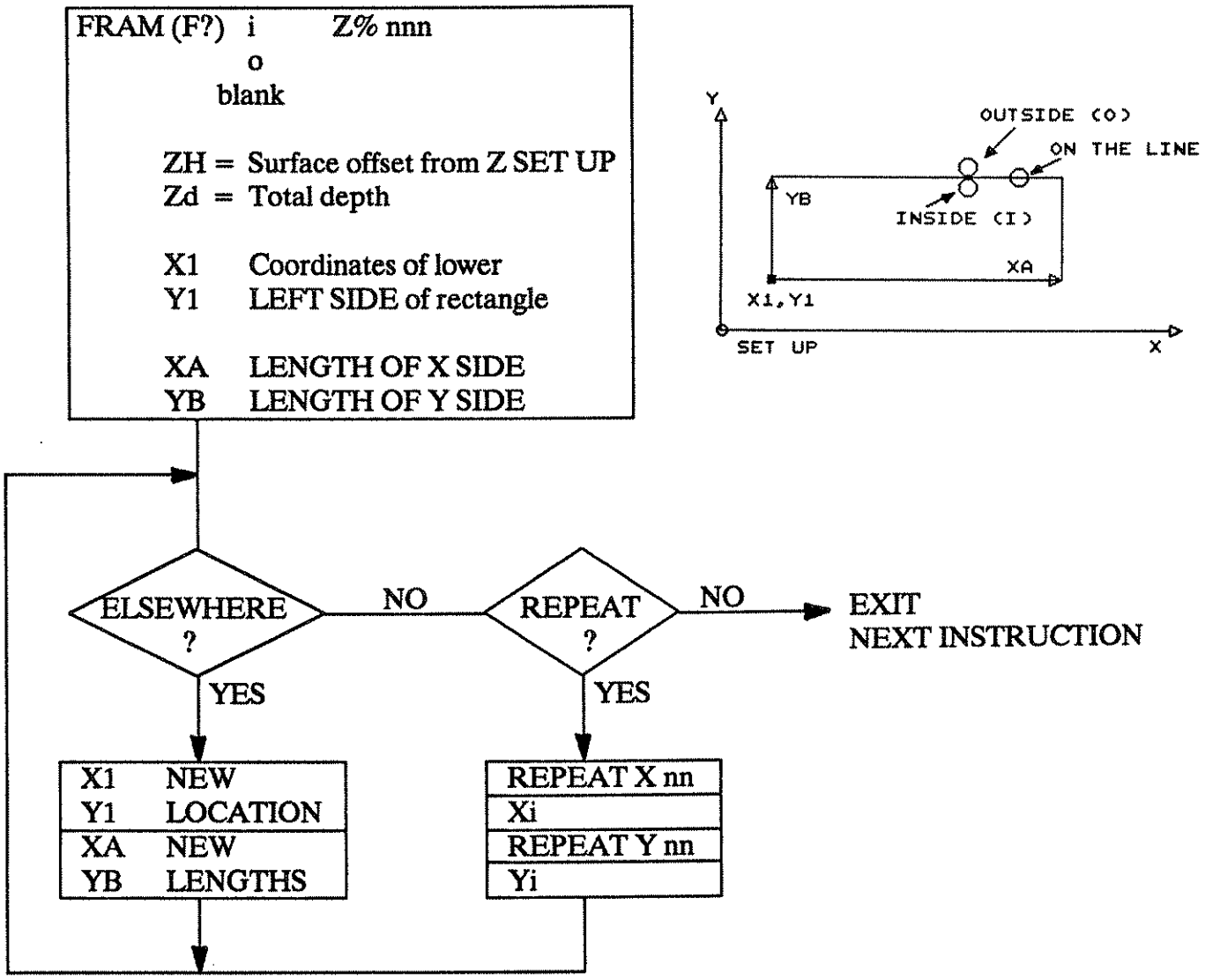

EXAMPLE OF RECT FRAME

The program using the RECT FRAME would be :

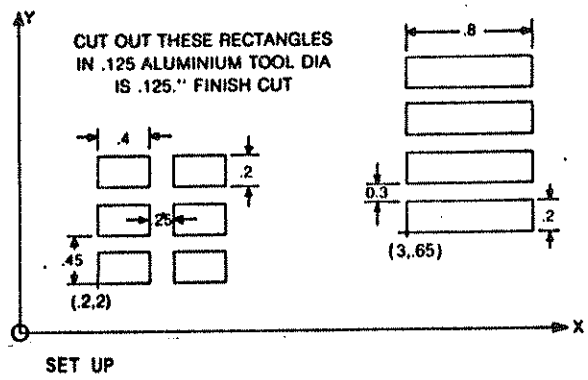


```
000   START INS  02
001   TD = .125
002   FR  XYZ =  8.0
003   SET UP  >  zcxyu
004   FRAME F  i  Z%  050
005   ZH = 0
006   Zd  =  .128
007   X1  =  .2
008   Y1  =  .2
009   XA = .4
010   YB = .2
011   REPEAT X  02
012   Xi  =  .65
013   REPEAT Y  03
(ELSEWHERE)  YES
015   X1  =  3.0
016   Y1  =  .65
017   XA = .8
018   YB = .2
019   REPEAT  X  01
020   Xi  =  0.0
021   REPEAT  Y  04
022   Yi  =  0.5
023   END
```

26.3 RECT POCKET FUNCTION

This function generates a rectangular pocket in the XY plane. If a finish cut (F) is requested the pocket is made smaller by 0.0064 ins. on each dimension and a final pass clears this out.

There is only Inside (i) allowed.

The ENTRY FORMAT is : -

RECT (F) i Z% nnn inside only

XY cut % nnn horizontal size of cut

ZH = Surface offset from Z set up
Zd = Total depth of pocket

X1 Coordinates of lower left
Y1 Corner of pocket

XA Length of rectangle X side
XB Length of rectangle Y side

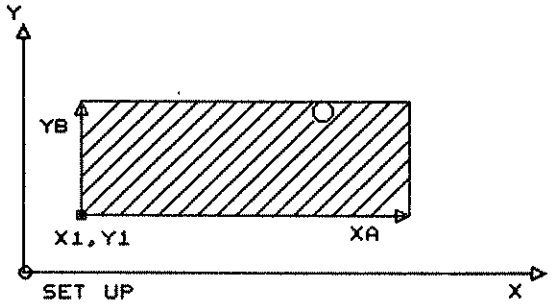

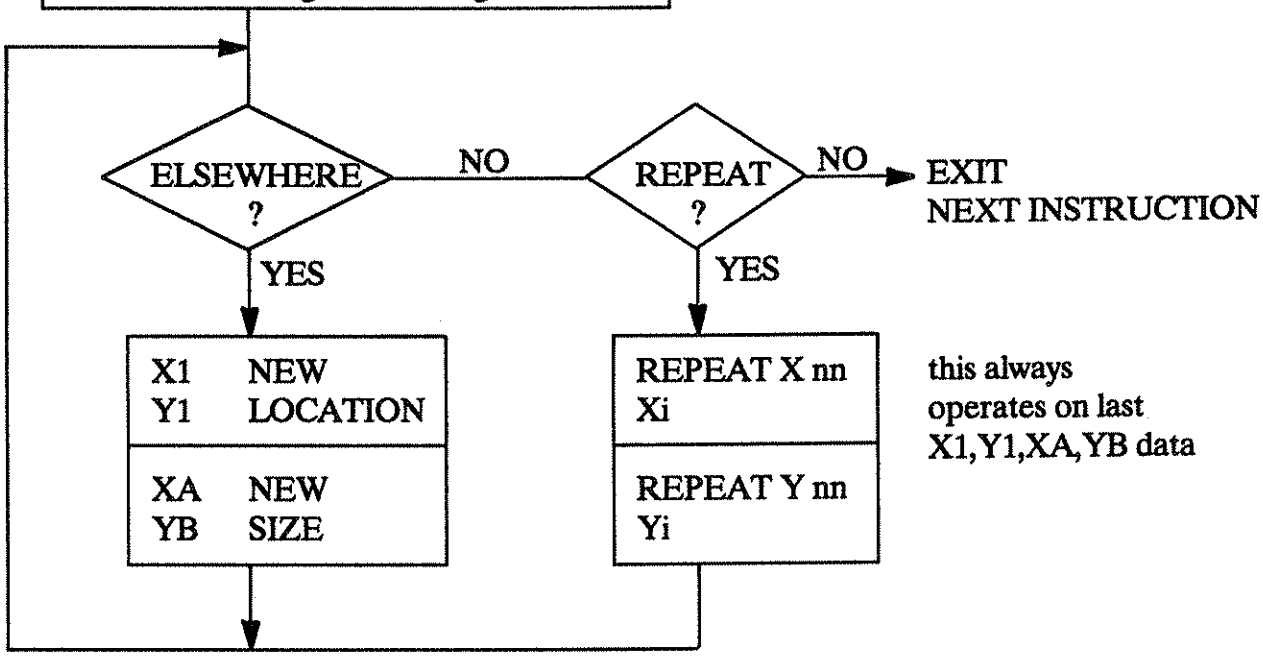

EXAMPLE OF RECT POCKET

This is a pocket in a pocket. The program would be:

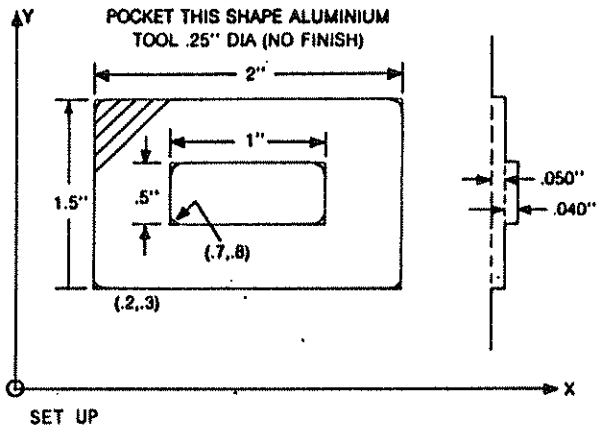


```
000   START INS  01
001   TD = .250
002   FR XY = 8
003   FR  Z  = 2
004   SET UP > zcxyu
005   RECT  i Z% 050
006   XY CUT %   050
007   ZH = 0
008   Zd  = .050
009   X1  = .2
010   Y1  = .3
011   XA = 2.0
012   YB = 1.5
013   RECT  i  Z% 050
014   XY  cut  %    050
015   ZH = -.05
016   Zd  = .040
017   X1  = .7
018   Y1  = .8
019   XA = 1.0
020   YB = .5
021   END
```

This function can be used for surface milling.

26.4 CIRCLE POCKET FUNCTION

This function generates a circular pocket of radius r1 with a center post of radius r2 on the inside. The tool is automatically compensated for on the inside of r1 and the outside of r2. If r2 = 0 then the post disappears. To cut a frame, make r2 = r1 - TOOL DIAMETER with no finish cut.

The ENTRY FORMAT is : -

CIRC (F) Z% nnn F is finish cut option

XY CUT % nnn Horizontal increment

ZH = Surface offset from Z SET UP

Zd = Depth of pocket

Xc Coordinates of center
Yc

r1 Outer radius
r2 Inner post radius

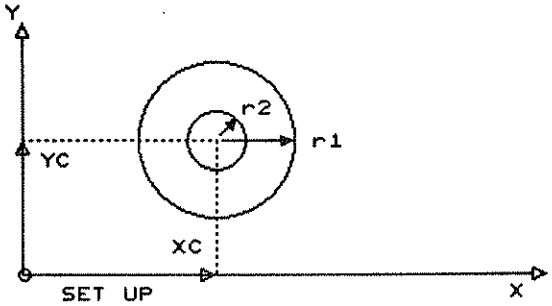

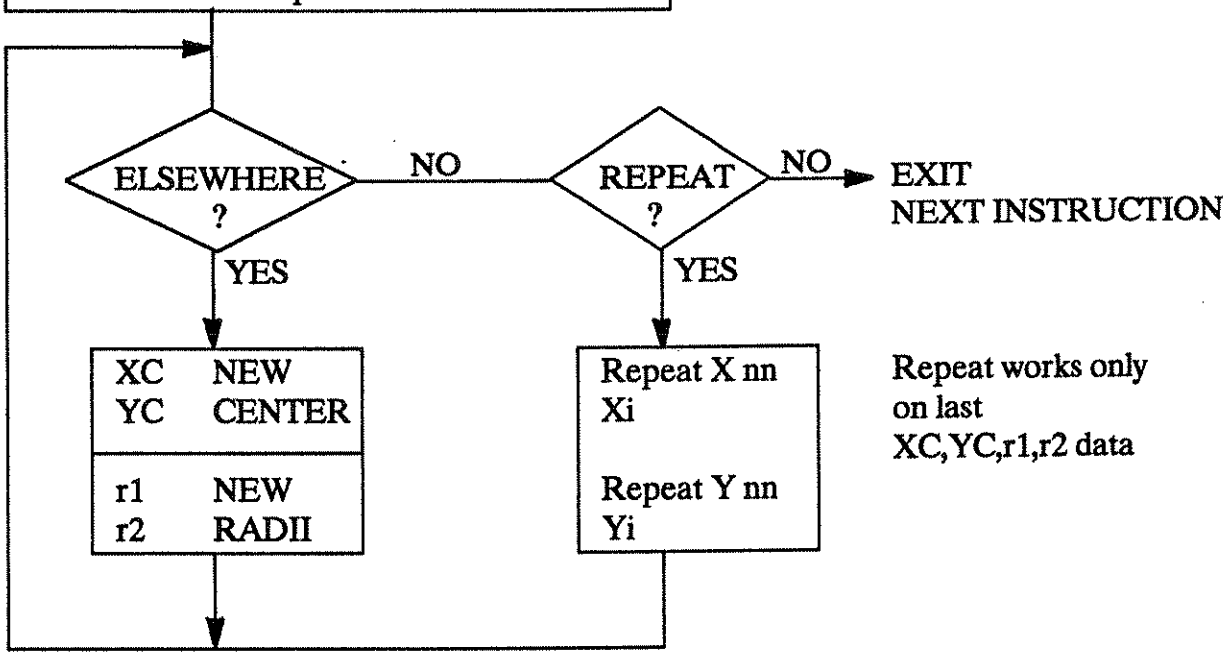

EXAMPLE OF CIRCLE POCKET

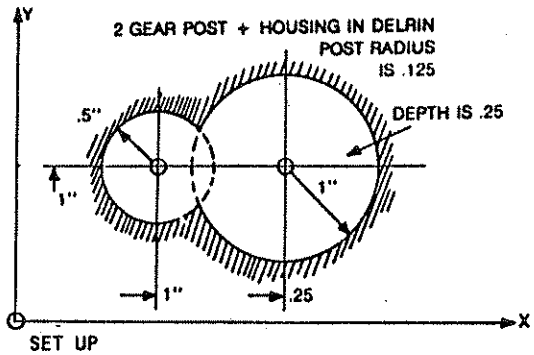

The program would be :

```
000   START INS  01
001   TD = .125
002   FR XYZ =  10
003   SET UP > zcxyu
004   CIRC F Z% 050
005   XY CUT %  050
006   ZH = 0
007   Zd  = .25
008   XC = 1
009   YC  = 1
010   r1 =  .5
011   r2 =  .125
      (ELSEWHERE)
012   XC = 2.25
013   YC = 1
014   r1  =  1
015   r2  =  .125
016   END
```

26.5 DRILL FUNCTION

This function simply drills a hole with a specified number of pecks to a depth Zd at coordinates (X,Y). The pecks are big ones, the drill is retracted at maximum speed to clear the hole, then comes down at maximum speed to within .005 ins of the bottom, to continue on the next peck at the programmed speed.

A peck equal to 00 goes straight to Z depth.

The ENTRY FORMAT is : -

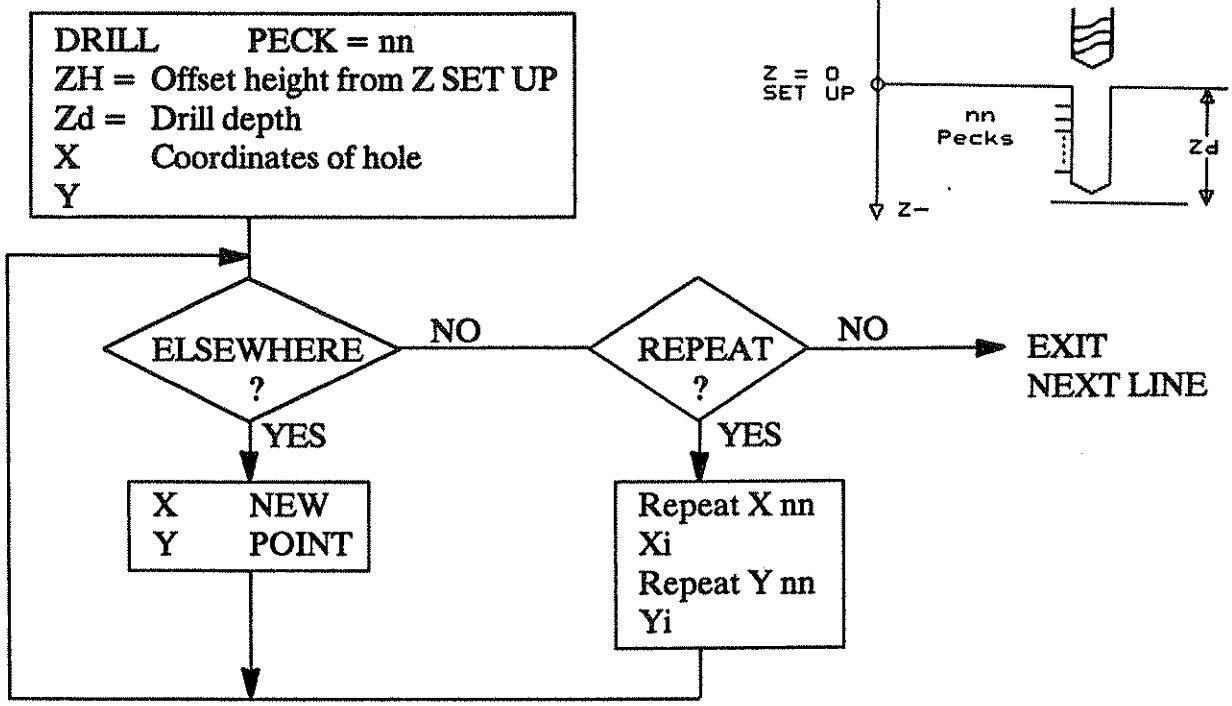

EXAMPLE OF DRILL

The program would be :

```
000   START INS 01
001   FR XY 16
002   FR Z 10
003   SET UP  > zcxyu
004   DRILL PECK = 02
005   ZH = 0
006   Zd = .25
007   X = .4
008   Y = 1
009   REPEAT X 04
010   Xi = .150
011   REPEAT Y 05
012   Yi = .150
(ELSEWHERE)
013   X = 1.4
014   Y = .8
015   REPEAT X 05
016   Xi = .150
017   REPEAT Y 09
018   Yi = .150
(ELSEWHERE)
019   X = 2.4
020   Y = .3
021   REPEAT X 01
022   Xi = 0
023   REPEAT Y 14
024   Yi = .150
025   END
```

26.6 BOLT CIRCLE FUNCTION

This function generates up to 99 drill holes each pecked nn times to a depth Zd on a circle of radius r at center (XC,YC). Angle a1 is the offset angle of the first hole from the X axis. There is no elsewhere or repeat.

The ENTRY FOR BOLT CIRCLE is : -

BOLT PECK = nn	
ZH =	Surface offset from Z set up
Zd =	Depth of hole
XC	Center of bolt hole circle
YC	
a1	Angle offset from X axis
N = nn	Number of holes
r =	Circle radius

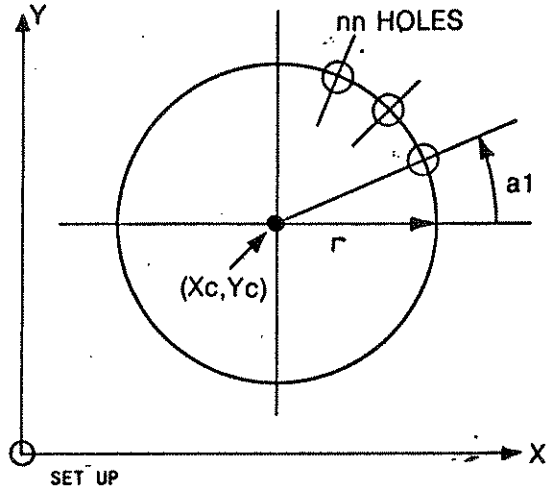

EXAMPLE OF BOLT CIRCLE

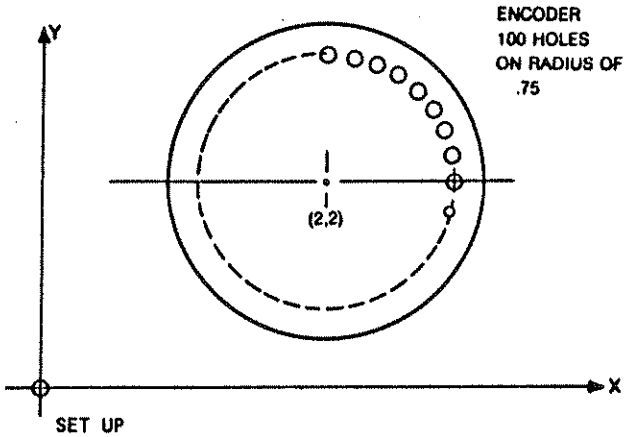

The program would be :

```
000   START INS  01
001   FR XY =    16
002   FR  Z =    8
003   SET UP > zcxyu
004   BOLT PECK = 0
005   ZH = 0
006   Zd = .1
007   XC = 2.0
008   XY = 2.0
009   a1 =  0 deg
010   N =  50
011   r =   .75
012   BOLT PECK = 0
013   ZH = 0
014   Zd = .1
015   XC = 2.0
016   YC = 2.0
017   a1 =  3.6
018   N =  50
019   r =  .75
020   END
```

26.7 ARC FRAME FUNCTION

This function simply moves the tool from its current position through an arc centered at XC,YC by an angle a to its final position. The main purpose of this function is to allow a zero at off the table such that the radius can be up to 36". Thus it can cut a very shallow arc.
There is no elsewhere or repeat

The ENTRY FORMAT FOR ARC FRAME:

ARC	
XC	Coordinates of ARC
YC	Center
a	Turn angle (degrees) + for counterclockwise - for clockwise

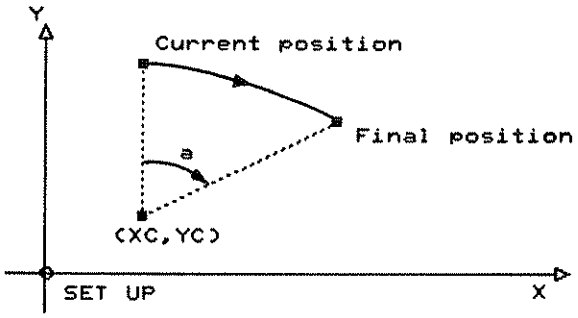

EXAMPLE OF ARC

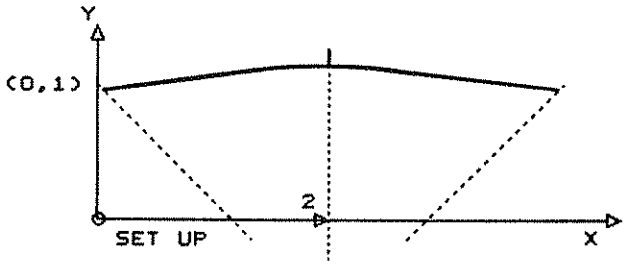

CENTER AT XC = 2.0
YC = 13.0

The program would be :-

```
000   START INS  01
001   TD = .125
002   FR XYZ =   10.0
003   SET UP  >  zcxyu
004   GO    Y     1.0
005   GO    Z     -.1
006   ARC
007   XC    2.0
008   YC    -13.0
009      a  -16.426
010   END
```

26.8 USING PROG REF FOR THE CANNED FUNCTIONS

The elsewhere and repeat on the canned functions allows the same function to be done at random or periodically across the XY plane. However it is sometimes necessary to do a sequence of canned functions at one location then move to a new location and repeat this sequence of canned functions. The best way to this is with the PROG REF instruction. Enclose the sequence of canned functions in a subroutine headed by PROG REF.
Move the tool to the required "new set up" point and call the subroutine. Rember that the next "new set up" point must be referenced to the previous one.

PART 4 OF MACHINE AND CONTROLLER

27. Running the machine in MANUAL

28. INSERT KEY
DELETE KEY
READ / WRITE KEY
} LINE MODE ONLY

29. The Φ KEY -- the Q angle

1) The Qualifiers on Q
2) Example of initial positioning and cutting

BALL CUTTER.

1. A 30 degree down hemisphere.
2. A 45 degree up hemisphere.
3. A 30 degree cylindrical slot along X axis.
4. A 30 degree cylindrical slot at 45 degree to X axis.
5. An arc parallel to the X axis.

SQUARE END MILL

6. Positioning Outside and Inside.
7. A 45 degree up hemisphere.
8. A 30 degree down hemisphere.

27. Running the machine in MANUAL MODE

The purpose of this mode is to allow the user to do very simple operations without programming the controller in for example cutting tests, simple drilling etc. Only one axis is moved at a time and it is exactly as though you had handles on each axis with a digital read out on each axis except the controller moves theselected axis for you. To enter it press the MANUAL MODE KEY, answer NO to TOOL CALIB? and YES to MANUAL? The controller will ask questions INS / MM ?, FEEDRATE ON EACH AXIS ? then AXIS ?. Press X Y or Z. Remember the axes is at the HOME POSITION. You can jog down on Z, X, or Y and ZERO the tool at the edge (USE ZERO COODS KEY). Press CLEAR, enter the desired coordinate, then press NEXT and the tool will move to that coordinate.

Do not cut in continuous jog as the feedrate is always fixed at 8 ins / minute or 20 cms / min. This can not be changed.

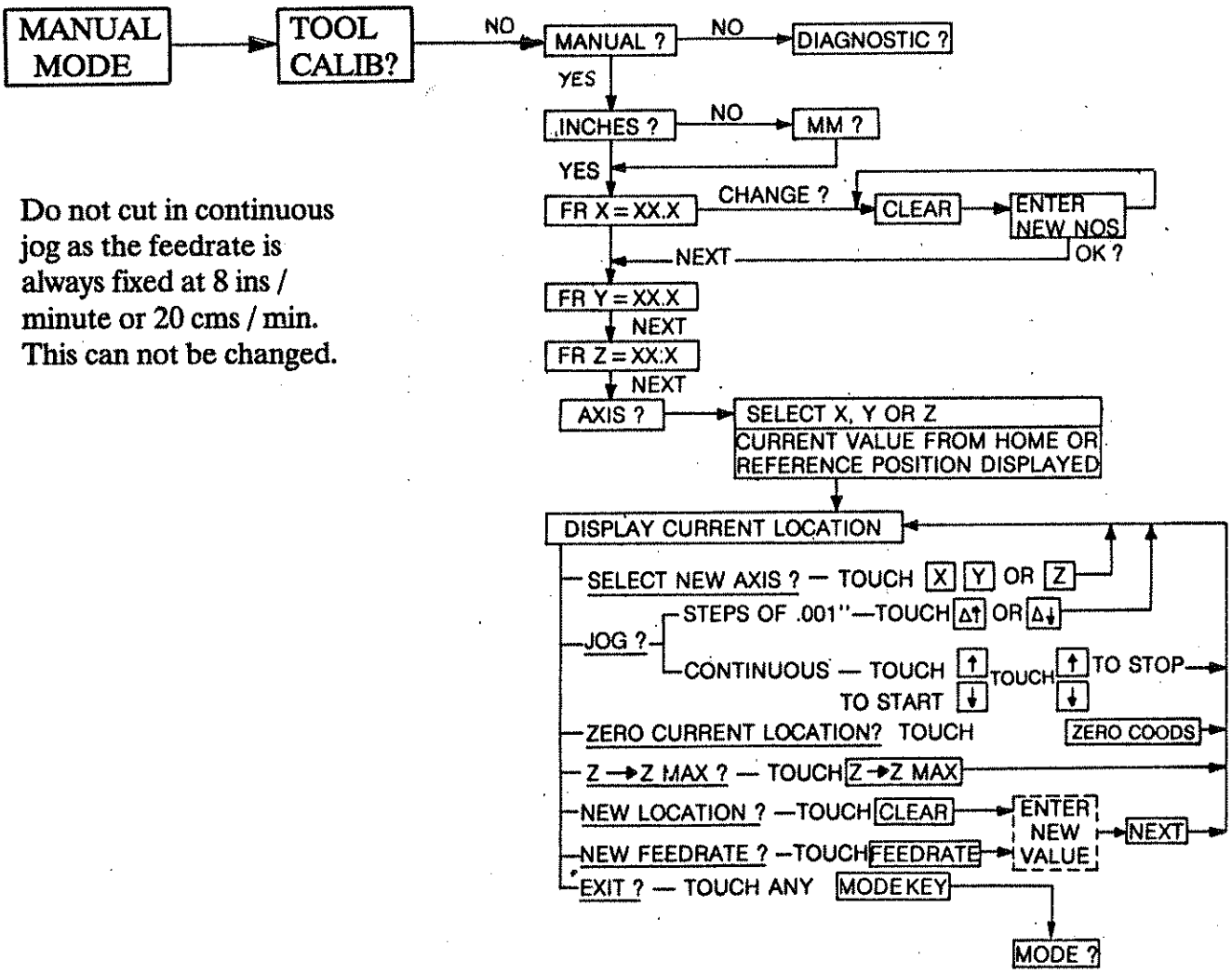

28. INSERT, DELETE AND READ / WRITE KEY

These keys only operate in the LINE MODE. The first two allow the user to insert or delete a program line at the current line. Pressing INSERT will automatically push the program down one line. Thus, for example if the program is as shown:

	000	START INS 01		000 START INS 01
	001	TD = 0.125		001 TD = 0.125
Current line	002	FR XYZ = 8.0	goes to	002
	003	GO X 2.4		003 FR XYZ = 8.0
				004 GO X 2.4

On pressing INSERT at line 002, the user can then switch to program enter mode to insert an additional instruction.
Insertion can only be done if there are blank lines between the program end and the program start of the next program.
Deletion operates similarly so pressing DELETE will give :-

	000	START INS 01		000 START INS 01
	001	TD = 0.125		001 TD = 0.125
Current line	002	FR XYZ = 8.0	goes to	003 GO X 2.4
	003	GO X 2.4		004

Care must be exercised when using these instructions if the skip instruction is used in the program.

The READ / WRITE KEY is used for three functions.

1) The micro cassette for storing and retrieving programs.
2) The printer, to print out controller programs.
3) The RS232 interface for PC communication to upload and download programs between the controller and the PC.

The first two require a desktop interface with peripherals, and how they operate is covered in the peripheral section of this manual.
The last one requires the user to have a suitable PC. An explanation of how it works is covered in the communication manual.

29. The O KEY - Q angle

Due to the difficulty of current PC's, printers etc. to tolerate Greek letters, the symbol phi O has been changed to Q. Angle Q denotes the polar coordinate angle of the tip above the XY plane.

As we vary angle Q, the tool tip will move in an arc, in a plane at an angle a to the X axis. If we keep angle Q constant, but vary angle a we generate a circular arc in a plane parallel to the XY axes.

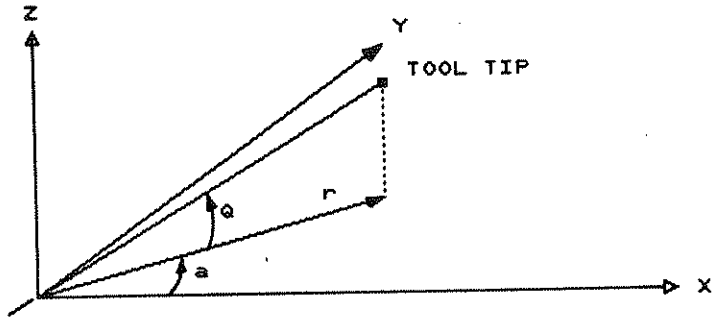

Suppose angle a = 0. Then we would see this:- As angle Q varies we cut a circle in the XZ plane.

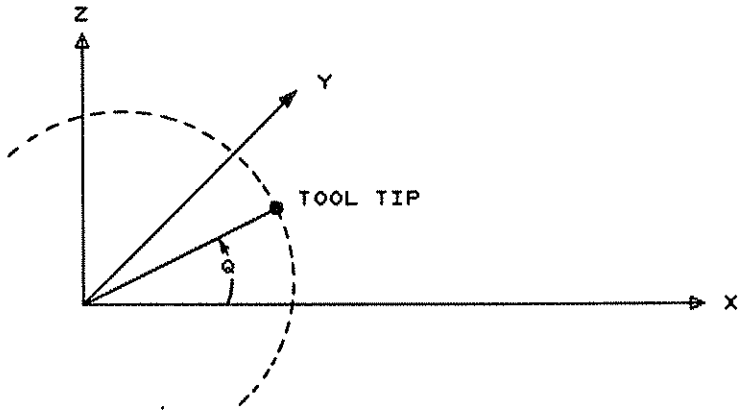

Suppose angle Q = 45 . If we vary angle a we would see the tool tip move in a circle like so around the Z axis.

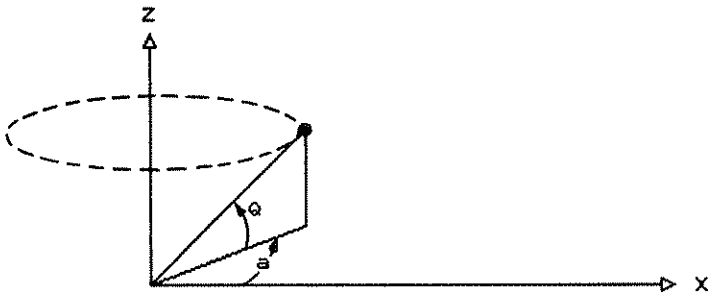

If we varied angles Q and a we would generate a sphere. If we set Q, then move for example X back and forth, then increment Q and so on, we would cut a cylindrical trench along the X axis. The cross section in the ZY plane would be a hemisphere.

29.1 Qualifiers on Q and Tool compensation

There are two kinds of cutting tools possible and the controller must know which is which in order to apply the correct tool compensation for a particular Q angle move.

For BALL CUTTERS we use either no qualifier blank, f (fast) and c (comeback)

For SQUARE ENDMILLS we use i (inside) and o (outside)

When the tool is zeroed on the surface, the tool CENTER in the case of the ball cutter is half the tool diameter above the surface. In a Q move this is automatically factored in if the qualifier is as above.

For a square end mill, i and o are used in a different sense but automatic compensation is still built in.

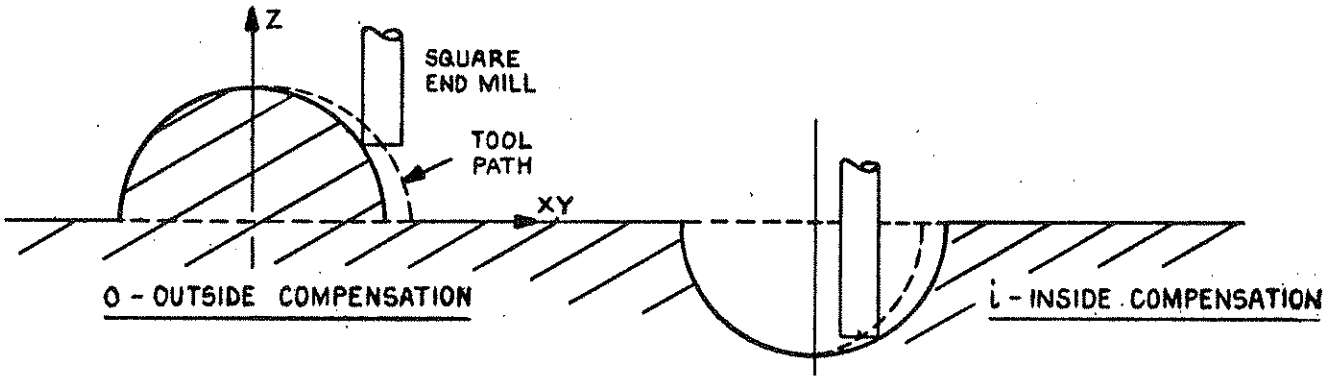

As can be seen above it is the edge of the square end mill that has to cut an arc not the tool center and the i and o apply to differentiate cutting above or below the XY plane. Consequently Q is defined for two ranges.

1. 180 > Q > 0 ABOVE the XY plane

and 2. 180 < Q < 360 BELOW the XY plane

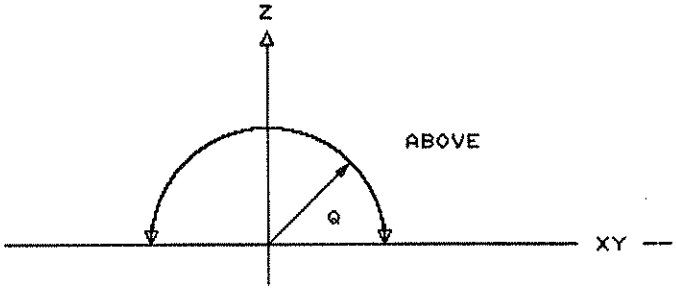

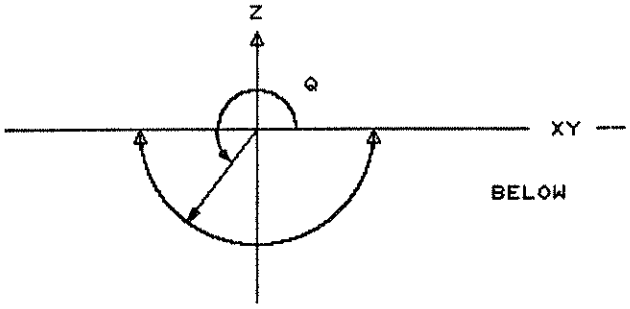

NOTE: You have to make 2 Q moves if you are operating 90 to 270 degrees. The first Q move is 90 to 180 degrees, the second is 180 to 270 degrees.

To cut partial arcs, Z must be zeroed correctly above or below the surface. Actually Z is correct but the surface has dropped or heightened because we use the surface as the reference.

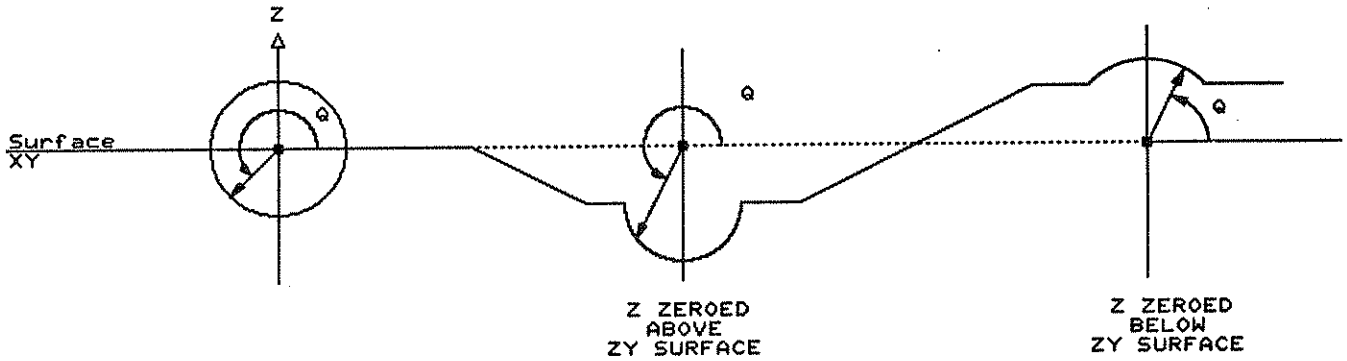

29.2 The Q instructions and how used

The instructions are simply with or without the appropriate qualifiers

GO Q + nnn . nnn	GO TO this absolute angle in degrees
GR Q + nnn . nnn	GO RELATIVE this amount of degrees from where you are.

To use them you need : -

1) To decide on a ball end mill cutter or a flat end mill one.
   If a flat end mill cutter, then all moves on Q should be qualified by inside or outside.
2) The tool must be initially positioned in space correctly. Examples follow.
3) The zero around which Q operates must be set correctly to correspond with the desired radius and angle.
4) Then the moves are generated with a combination of Q, X, Y or (r,a) to cut the required surface.
5) Check the program out in wax first.

29.3 Examples of initial Positioning and Cutting

1) Cutting a 30 degree down hemisphere with a ball cutter

Suppose the radius R of the down hemisphere is 1 inch and the ball cutter diameter is .125 inches. The zero point on Z where we swing angle Q is

$$R \cos Q = 1 \times \cos 30$$
$$= \underline{0.866}$$

The surface radius of the hemisphere Z'B = R sin Q
= r x sin 30 = 0.5

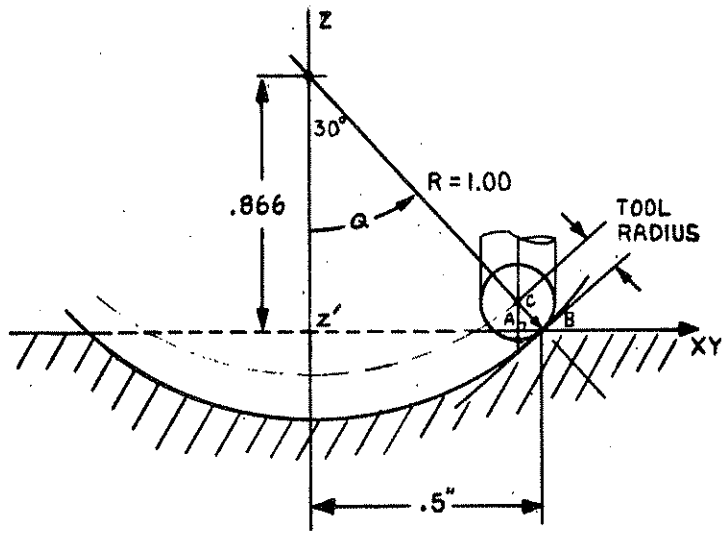

As can be seen, with the ball cutter positioned correctly, the tool has to be raised by the amount AC and the radius shortened by the amount AB. This will position the ball end mill tangentially to the surface of the hemisphere.

Hence : AC = BC cos 30 = 0.0541
AB = BC sin 30 = 0.03125 (BC = 0.0625)

So the correct initial move is

```
GO Z .0541
GO r .4687  (.5 - .03125)
   a 0
```

And the program becomes : -

```
START INS 01
TD = 0.125
FR XY =   16.0
FR  Z =   10.0
SET UP > zcxyu
SPINDLE ON

GO   z    .0541      INITIAL POSITION
GO   r    .4687      OF TOOL
     a    0.0

ZERO AT              SET CENTER
GO   z    0.8660     OF SPHERE

REPEAT    60
GR f  Q   -0.5
GR    a   360.0
REPEAT END

Z > C
SPINDLE OFF
END
```

A horizontal circle is cut with Q getting smaller by 0.5 degrees on each repeat (60 x 0.5 = 30 degrees).

2) Cutting an up 45 degree hemisphere with a ball cutter

The center of the hemisphere is 1 inch below the surface. The program becomes : -

```
START INS 01
TD = 0.125
FR XY = 16.0
FR  Z = 10.0
SET UP > zcxyu
SPINDLE ON
GO z 0.0
ZERO AT
   z -1.000
REPEAT 90
GR f Q    -0.5
GR  a     360
REPEAT END
Z > C
SPINDLE OFF
END
```

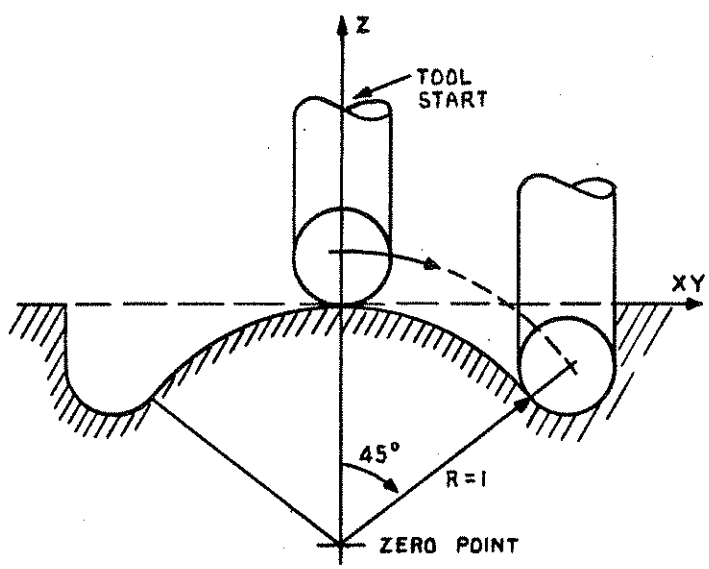

The critical program section is outlined. On each repeat we move Q incrementally in 0.5 degree steps then rotate in a circle in the XY plane.

3) <u>Cutting a circular slot along the X axis, with a ball cutter</u>

The simplest way to do this is to move the tool back and forth along the X axis while moving Q in small increments.
The critical section becomes:-

```
GO  Z 0.0541   POSITION TOOL OUT
GO  r 0.4687   ALONG THE
    a 90.0     Y AXIS
ZERO  AT       FIX CENTER HEIGHT
    Z  .866
```

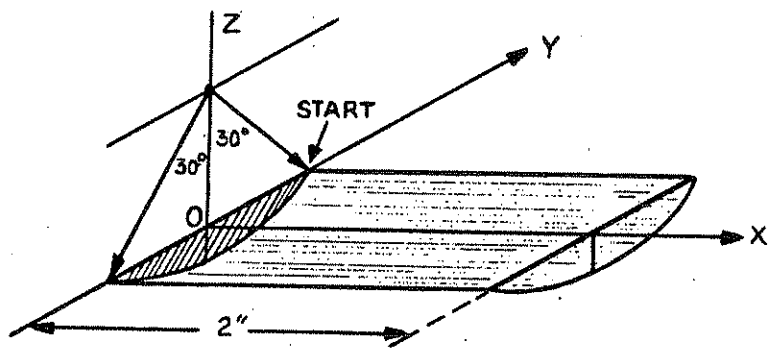


```
REPEAT    03
REPEAT    40
 GR f Q   -0.5
 GR c X   2.0
REPEAT END
REPEAT END
```

Move Q 120 times, 0.5 degrees (=60 degrees)
Move X along 2 inches and come back.
or we can do this by incrementing along X, re-zeroing X, then swinging Q from 240 degrees to 300 degrees.

```
REPEAT    10

GO    Q   240.00
GR    X   .1

ZERO      X

GO    Q   300.00
GO    X   .1

ZERO      X

REPEAT END
```

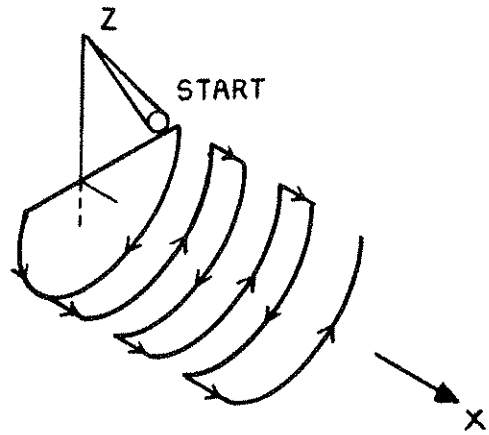

Incrementing .1 along X on each Q swing.

4) <u>A 30 degree cylindrical slot at 45 degrees to the x axis</u>

Again the simplest way to do this is to move the tool back and forth along the slot, then to move Q incrementally.

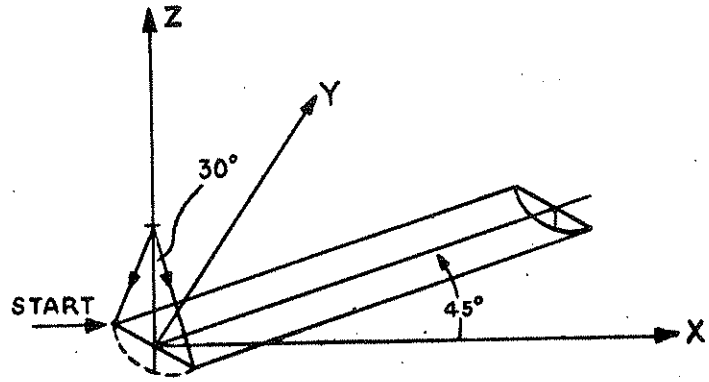


```
GO  Z  0.0541
GO  r  0.4687  POSITION TOOL
    a  135.0

Zero at        FIX CENTER
    Z  .8660   HEIGHT

REPEAT    03
REPEAT    40
GR  f  Q     -0.5
GR    X   1.4142    Go out at 45 degrees
      Y   1.4142          and
GR    X  -1.4142        come back
      Y  -1.4142
REPEAT END
REPEAT END
```

NOTE : Since we can't do REPEAT 120 we simply break it into two repeats of 3 and 40.

5) <u>An arc parallel to the X axis</u>

Using a ball end mill of diameter .125 and an R = 1

We have to position the tool correctly at the start of the arc.

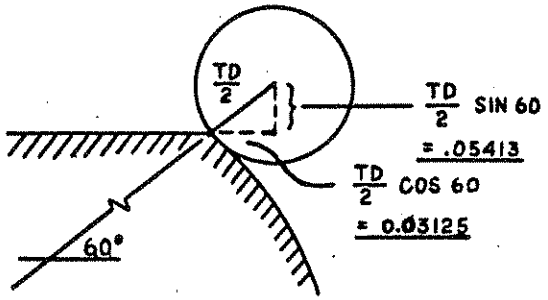

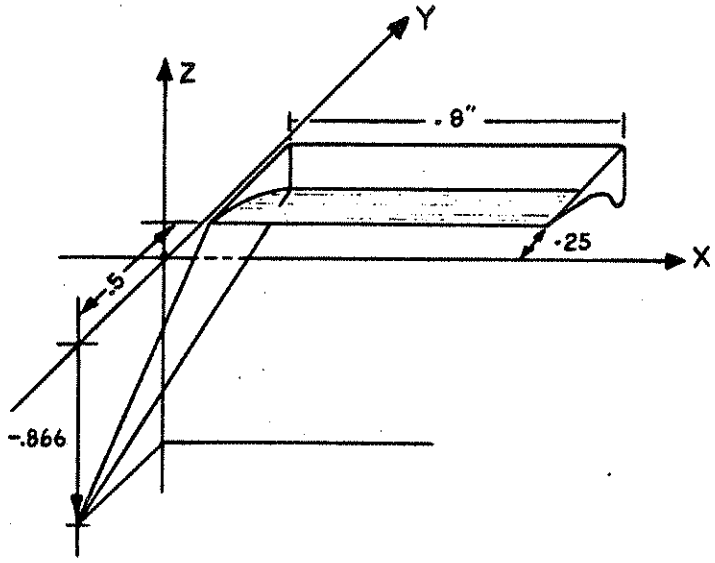

The instructions are : -

GO Y .2813 (.25 + 03125)
GO Z .0541

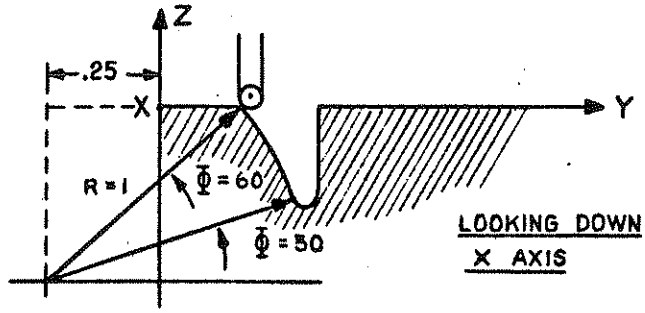

Next we zero the axis about which Q moves :-

ZERO AT
Z - .866
Y - .25
Then REPEAT 60
GR f Q -0.5
GR c X 0.8
REPEAT END

This produces a convex arc. By moving the zero above the surface we can generate a concave arc. Like so : -

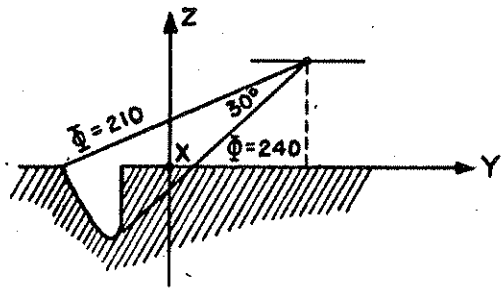

6) <u>SQUARE END MILL</u>

The user must position the square end mill initially correctly and then any Q moves, using i inside or o outside, will compensate automatically to ensure that the tool edge traces an arc.

<u>For outside compensation</u>

The edge of the end mill must be touching the arc A at the initial starting point. So the center must be at A .

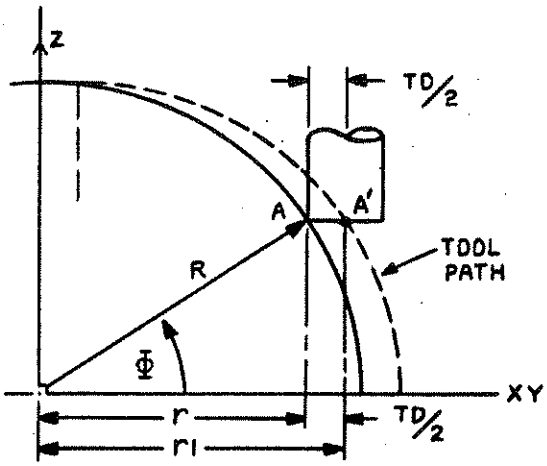

Suppose Q = 40 degrees,
R = 1 and TD = .125.

Then z = R sin 40 = 0.6428
r = R cos 40 = 0.7660

So the <u>tool center</u> is positioned at (z, r1)

where z = 0.6428
r1 = 0.766 + TD / 2 = 0.8285.

For inside compensation

Again the tool center B must be positioned such that B touches the arc on the inside. If Q = 320 degrees, R=1 and TD = .125

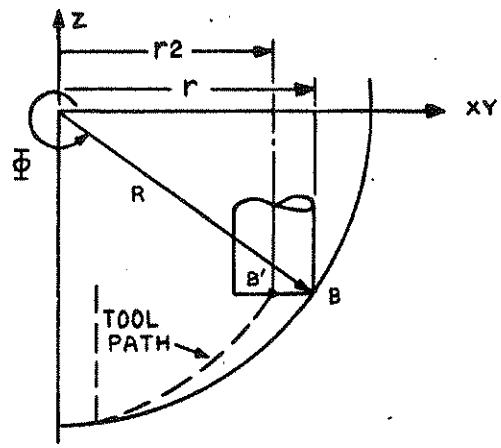

Then z = R sin (-40) = -.6428
r = R cos (-40) = .7660

So r2 = .7660 - TD/2 = .7035
and the tool is positioned at

(z , r2) = (-.6428, .7035)

7) A 45 degree up hemisphere with a square end mill

R = 1 and the tool diameter is .125.
There are two ways to do this, starting at the top or starting at the bottom.

Starting at the top

```
START INS 01
TD =        0.125
FR XY =     16.0
FR   Z =    10.0
SET UP > zcxyu
SPINDLE ON
GO   Z      0.0
ZERO AT
     Z      -1.0    Set center 1.0 below

 REPEAT 90
 GR o Q     -0.5    Move Q outside .5 degrees
 GR   a     360.0   Cut circle
 REPEAT END

SPINDLE OFF
Z > C
END
```

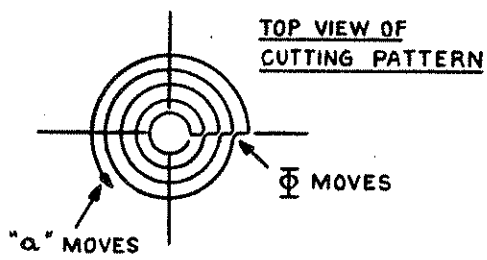

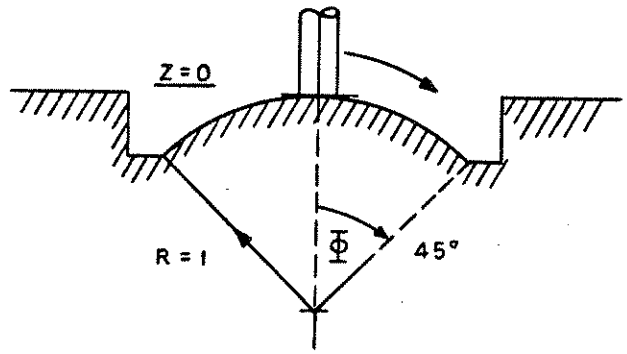

The top view of the cutting patten is shown opposite.

Starting at the bottom

Replace the box above by

```
GO  r  0.7695  (.707 + TD/2)
GO  Z  0.707
REPEAT  90
GR o Q  .5
GR    a  360.0
REPEAT END
```

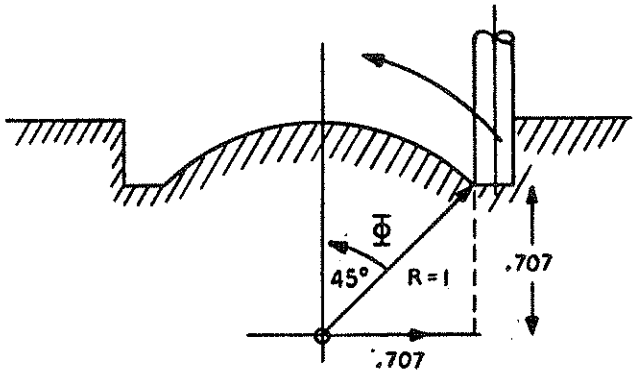

8) A 30 degree down hemisphere with a square end mill.

Again R = 1 and the tool is .125

Circular cutting pattern

```
START  INS  01
TD  =          0.125
FR  XY  =      16.0
FR     Z  =    10.0
SET UP  >  zcxyu
SPINDLE ON
GO     Z       0.0
ZERO  AT
       Z       0.8660
GO  i r        0.5
       a       0.0
REPEAT  60
GR  i  Q       -0.5
GR     a       360.0
REPEAT END
SPINDLE OFF
Z  >  C
END
```

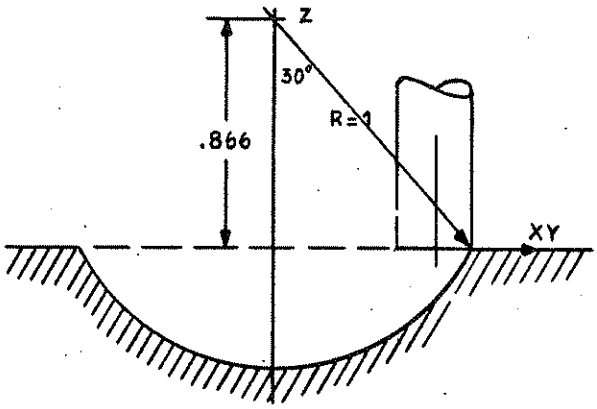

Arcing cutting pattern

Replace the above box by

```
REPEAT  90
 GO  i  r   0.5
 GO     z   0.866
 GO  i  Q   240.0
 GO     a   2.0
 GO  i  Q   300.0
 GR     a   2.0
REPEAT END
```

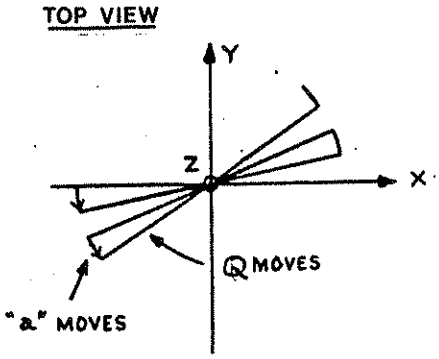

PART 5 OF MACHINE AND CONTROLLER

30. Errors & Error codes

31. DEBUGGING PROGRAMS

32. DEBUGGING PRODUCTION RUNS.

33. EMERGENCY MOVE

34. MANUAL MODE AND DIAGNOSTICS.

35. Instruction FORMAT

31. Errors and Error Codes

1) RUNTIME ERRORS

Certain errors can be checked at run time. Here is a list. The error message format is :

ERROR nn

The user can switch to LINE NO MODE when this is displayed to examine his program and check his entry.

00	X, Y, Z	AXIS DESTINATION BEYOND MAXIMUM TRAVEL or GO r too big.
01	X, Y, Z	AXIS DESTINATION BEYOND MAXIMUM TRAVEL. This occurs most often when doing outside cuts with or without finish option with the part clamped too close to thehome position, the part must be clamped to allow for the tool radius (+ option of 6.4 thous of finish cut) clear of the home position.
02	XA, XB	Too small for inside or on the line cut or tool diameter too large.
03	XA, XB	Values must be positive.
04	X, Y	Axis beyond minimum for finish cut.
05		Repeating same axis in 2 or 3 axis move e.g. GO x = 2.3 or GO x = 2.3 x = 3.4 r = 3.4
06		Tool diameter is zero.
07		Z% is zero
08		Zd must be positive.
09		GO, r r must be positive.
10		In circle function r1 - r2 too small for tool diameter with or without finish option.

2) DEFAULT to mm ERROR

When the machine is switched on, the controller automatically defaults to mm unless the controller reads a PROGRAM START INS statement at location 000.
If there is no program start instruction at this address, the controller is in mm until the user passes through with the NEXT key, or line number entry, a program start instruction in inches. That is, the controller tries to make as intelligent a decision as possible as to the ins or mm setting for each program, either when running or entering information. The user can instantly determine the setting by looking at the number of digits behind the decimal place, 3 for mm 4 for inches.
However, it is possible to fool the controller. One example is on switch on to have location 000 blank, then to jump through line mode to the middle of a program or subroutine and start entering data in inches which will be taken by mistake as mm. Because the controller has not received any contrary information, the result will be a scaling down by 25.4 when the program is run.

32. DEBUGGING PROGRAMS

1) Make sure that the information on the drawing is adequate and correct. We have seen many contours that don't meet, blend radii unspecified and non tangent tangents.
2) It is best to start small and build up the program gradually. Check it out in plastic first. Add display X, Y, Z where necessary. Include spindle OFF / ON, END NEW PART, BUZZER, PAUSES once it is debugged.
3) Insert GO X 0.0, GO Y 0.0, GO Z 0.0 before the SET UP instruction. During SET UP, display the X, Y, Z values, note them down, then re-insert the values in the GO statements. This will preserve the SET UP, if the machine is switched off. When re-starting the program you only have to capitalize X Y Z and set C (Z Clear) to continue.

33. DEBUGGING PRODUCTION RUNS.

1) Watch temperature. A rise of 1 degree centigrade can produce a tenth of a thou. error.
2) Tools deflect and will deflect more as they become less sharp. Always use coolant where possible.
3) If something is not right in the part check: -
   1. Does it occur at random?
   2. Is it time dependent? These two suggest electrical line noise.
   3. Does it occur at a particular line in the program? Let us know.
   4. Does it do END NEWPART and reposition at SET UP correctly (if not check the limit switch).
   5. Does it drift in a particular axis consistently? if so there is a simple test to check the driver board by interchanging it with another axis to see if the problem follows the driver board.
4) Don't let lube pump run dry.

34. EMERGENCY MOVE

Sometimes a program move is made that hits the clamp, some jig, or the feedraate is too fast. THE USER SHOULD HIT THE EMERGENCY STOP SWITCH, free the spindle lock, clear the obstruction then re-start. It is not possible to recover from such a situation.
If the user has so jammed the machine up that re-initialization is impossible (e.g., a saw blade locked in horizontally so that the Z initialisation is inhibited) the user should answer NO to the READY? at switch on. This will enable the emergency movement. The user can then select the X, Y, or Z axis and use the jog keys to move the table to free the obstruction. Touching the NEXT key and answering YES to READY? will automatically re-initialize the machine. These moves should be used with extreme caution.

35. MANUAL MODE AND DIAGNOSTICS

Built into the MANUAL MODE is a set of diagnostics. To arrive at it, answer NO in MANUAL mode. Answer YES if this diagnostic is required.

CHECKSUM OF ROM

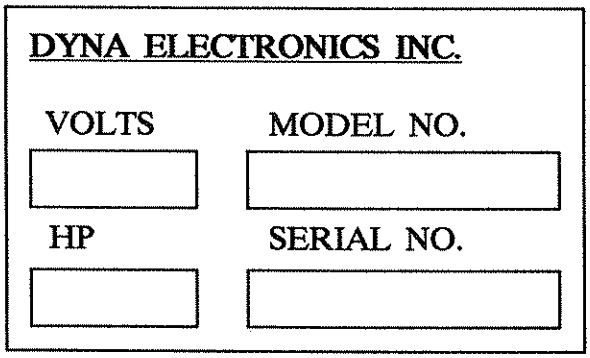

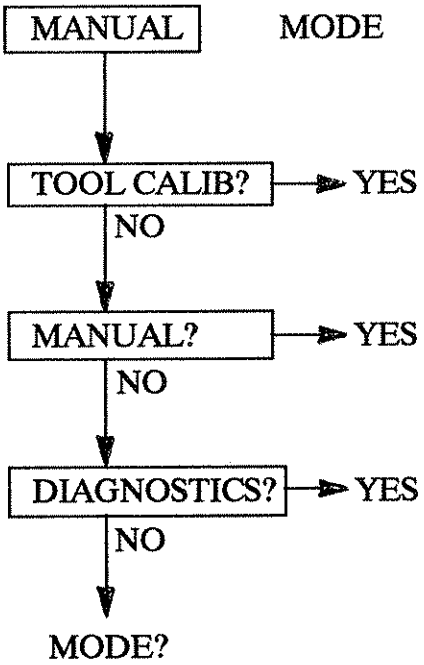

This value should agree with the value on the back of the controller. It is the software release number.

CMOS MEMORY CHECK This checks the CMOS memory. If bad, location and chip number will be indicated.

MOTOR CHECK At [AXIS TEST?] press any combination of X, Y, Z to be tested, then press the NEXT key. The axis will travel to its maximum distance and return to its home position. This is very useful in checking axis operation and in lubrication of slides.

DEMO

This is a Demo program which cuts the following geometry :-

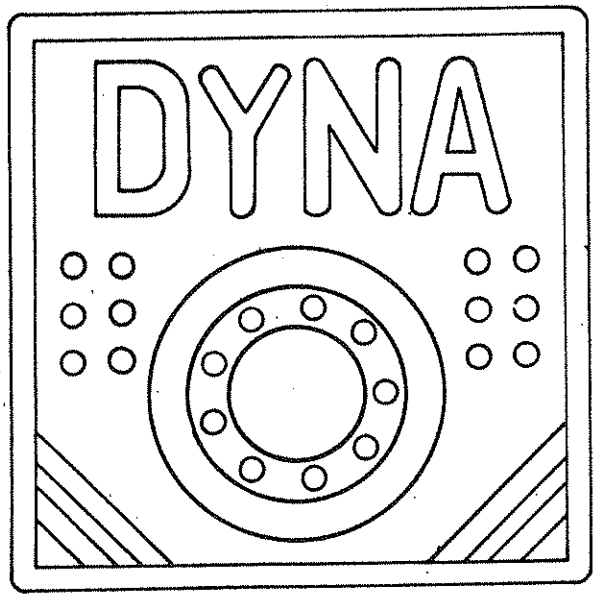

The program is written for use with a .125 dia end mill and a 1/4 inch thick 6 x 6 inch acrylic, plexiglass or aluminum sheet. The sheet must be placed and clamped in the center of the table. This program is automatically dumped into program location 700 to 814 and will start automatically as well. It will stop at set-up to allow the user to position the tool in the center of the work piece. Put the spindle switch at local and on, then press the NEXT key. If called, it will destroy any programs residing in this space, so don't try it if you have any program on these lines.

DISTRIBUTION BOARD CHECK Say NO to this diagnostic as it is no longer applicable.

37. INSTRUCTION FORMAT

INSTRUCTION		LINE NUMBER 1	2	3	4	5	6	7	8	9	FORMAT 10	11	12	13	14	15	16
START	(INCHES)	*	*	*		S	T	A	R	T		I	N	S		n	n
	(mm)	*	*	*		S	T	A	R	T		M	M			n	n
TOOL DIAMETER	(INCHES) FORMAT	*	*	*			T	D	=		n	n	.	n	n	n	n
	(mm) FORMAT	*	*	*			T	D	=		m	m	m	.	m	m	m
FEED RATE	(INCHES)	*	*	*		F	R		(X)	(Y)	(Z)	(U)					
	(mm)	*	*	*		F	R		(X)	(Y)	(Z)	(U)	=	n	n	.	n
SET UP		*	*	*		S	E	T	U	P		>	z	c	x	y	u
GO ABS	1 AXIS MOVE	*	*	*					(X) (Y) (Z) (r) (u)	(S)	n m	n m	. m	n .	n m	n m	n m
GO REL									(a) (o)		d	d	d	.	d	d	d
(q) ONLY ALLOWED ON 1 AXIS MOVE	2 AXIS MOVE ABOVE +	*	*	*+1					(X) (Y) (Z) (r)	(S)	n m	n m	. m	n .	n m	n m	n m
									(a)		d	d	d	.	d	d	d
q = i o BLANK	3 AXIS MOVE ABOVE +	*	*	*+2						(S)	n m	n m	. m	n .	n m	n m	n m
Z ----------> Z CLEAR		*	*	*		Z	>	C									
Z ----------> Z MAX		*	*	*		Z	>	C	M	A	X						
ZERO COODS		*	*	*		Z	E	R	O					(X)	(Y)	(Z)	(U)
ZERO AT		*	*	*		Z	E	R	O		A	T					
RECTANGULAR		* * *	* * *	*+1 *+2 *+3					(X) (Y) (Z)	(S) (S) (S)	n n n	n n n	. . .	n n n	n n n	n n n	n n n
POLAR		* * *	* * *	* *+1 *+2		Z	E	R	O (r) (a)		A n d	T n d	. .	n d	n d	n d	n d
CS		*	*	*		C	S	I	G	N		r	a	X	Y	Z	U
CYCLE		*	*	*		C	Y	C	L	E		X	Y				
----->REF COODS		*	*	*		>	R	E	F		C	O	O	D	S		
XY ----> REF 0		*	*	*		X	Y	>	R	E	F		0				
PROG REF		*	*	*		P	R	O	G	.	R	E	F				

INSTRUCTION FORMAT COTD

		LINE NUMBER / FORMAT															
		1	2	3	4	5	6	7	8	9	10	11	12	13	14	15	16
TOOL CHANGE	TOOL N	*	*	*		T	O	O	L			N					
	TOOL CHANGE	*	*	*		T	C										
	TOOL CHANGE (NEW COOD)	*	*	*		T	C		N	E	W		C	O	O	D	
2400 ONLY	X COOD	*	*	*			T	X	=	(S)	n	n	.	n	n	n	n
	Y COOD	*	*	*			T	Y	=	(S)	n	n	.	n	n	n	n
FUNCTION	00 (SCALE)	*	*	*		S	C	A	L	E		O	N				
		*	*	*				(X)			n	n	.	n	n	n	n
		*	*	*				(Y)			n	n	.	n	n	n	n
		*	*	*				(Z)			n	n	.	n	n	n	n
		*	*	*		S	C	A	L	O	F	F		(X)	(Y)	(Z)	
RECT FRAME		*	*	*		F	R	A	M		(F)	(q)	Z	%	n	n	n
		*	*	*			Z	H	=		n	n	.	n	n	n	n
		*	*	*			Z	d	=								
		*	*	*			X	1	=								
		*	*	*			Y	1	=								
		*	*	*			X	A	=								
		*	*	*			Y	B	=								
ELSEWHERE (OPTION)		*	*	*			X	1	=								
		*	*	*			Y	1	=								
		*	*	*			X	A	=								
		*	*	*			Y	B	=								
REPEAT (OPTION)		*	*	*			R	E	P	E	A	T		X		n	n
		*	*	*			X	i	=		n	n	.	n	n	n	n
		*	*	*			R	E	P	E	A	T		Y		n	n
		*	*	*			Y	i	=		n	n	.	n	n	n	n
CIRCLE POCKET		*	*	*		C	I	R	C		(F)	(q)	Z	%	n	n	n
		*	*	*					X	Y	C	U	T	%	n	n	n
		*	*	*			Z	H	=		n	n	.	n	n	n	n
		*	*	*			Z	d	=								
		*	*	*			X	C	=								
		*	*	*			Y	C	=								
		*	*	*			r	1	=								
		*	*	*			r	2	=								
ELSEWHERE (OPTION)		*	*	*			X	C	=								
		*	*	*			Y	C	=								
		*	*	*			r	1	=								
		*	*	*			r	2	=								
REPEAT (OPTION)		*	*	*			R	E	P	E	A	T		X		n	n
		*	*	*			X	i	=		n	n	.	n	n	n	n
		*	*	*			R	E	P	E	A	T		Y		n	n
		*	*	*			Y	i	=		n	n	.	n	n	n	n

INSTRUCTION FORMAT COTD

	LINE NUMBER				FORMAT											
	1	2	3	4	5	6	7	8	9	10	11	12	13	14	15	16
CONTROL (BUZZUR)	*	*	*		C	O	N	T	R	O	L					1
(PULSE OUT)	*	*	*		C	O	N	T	R	O	L					2
(PULSE IN)	*	*	*		C	O	N	T	R	O	L					3
SPINDLE OFF	*	*	*		S	P	I	N	D	L	E			O	F	F
ON	*	*	*		S	P	I	N	D	L	E				O	N
DISPLAY	*	*	*		D	S	P	L	Y		(r)	(a)	(X)	(Y)	(Z)	(U)
DWELL	*	*	*		D	W	E	L	L						n	n
NOP (NO INSTRUCTION)	*	*	*													
END END	*	*	*		E	N	D									
END NEWPART	*	*	*		E	N	D		N	E	W	P	A	R	T	
END NEW REF	*	*	*		E	N	D		N	E	W		R	E	F	
.ELSEWHERE	*	*	*+1													
POINT 1	*	*	*+2			X	1	=		n	n	.	n	n	n	n
	*	*	*+3			Y	1	=		n	n	.	n	n	n	n
POINT 2	*	*	*+4			X	1	=		n	n	.	n	n	n	n
	*	*	*+5			Y	1	=		n	n	.	n	n	n	n
POINT nn						X	1	=		n	n	.	n	n	n	n
	*	*	*			Y	1	=		n	n	.	n	n	n	n
.REPEAT	*	*	*			R	E	P	E	A	T		X		n	n
	*	*	*			X	i	=		n	n	.	n	n	n	n
	*	*	*			R	E	P	E	A	T		Y		n	n
	*	*	*			Y	i	=		n	n	.	n	n	n	n
SKIP TO	*	*	*		S	K	I	P		T	O			n	n	n
CALL	*	*	*		C	A	L	L		S	U	B			n	n
SUBROUTINE	*	*	*		S	U	B								n	n
SUB RETURN	*	*	*		S	U	B		R	E	T	U	R	N		
REPEAT	*	*	*		R	E	P	E	A	T					n	n
REPEAT END	*	*	*		R	E	P	E	A	T				E	N	D
HALT	*	*	*		H	A	L	T								

INSTRUCTION FORMAT COTD

	LINE NUMBER / FORMAT															
	1	2	3	4	5	6	7	8	9	10	11	12	13	14	15	16
BOLT CIRCLE	*	*	*		B	O	L	T		P	E	C	K	=	n	n
	*	*	*			Z	H	=		n	n	.	n	n	n	n
	*	*	*			Z	d	=		n	n	.	n	n	n	n
	*	*	*			X	C	=		n	n	.	n	n	n	n
	*	*	*			Y	C	=		n	n	.	n	n	n	n
	*	*	*			a	1	=		d	d	.	d	d	d	d
	*	*	*			n	=								n	n
	*	*	*			r	=			n	n	.	n	n	n	n
MILL (q) = i / o / blank	*	*	*		M	I	L	L			(q)	Z	%	n	n	n
	*	*	*			Z	H	=	(S)		n	.	n	n	n	n
	*	*	*			Z	d	=								
	*	*	*			X	1	=								
	*	*	*			Y	1	=								
	*	*	*			X	2	=								
	*	*	*			Y	2	=								
ELSEWHERE (OPTION)	*	*	*			X	1	=								
	*	*	*			Y	1	=								
	*	*	*			X	2	=								
	*	*	*			Y	2	=								
REPEAT (OPTION)	*	*	*			R	E	P	E	A	T		X		n	n
	*	*	*			X	i	=		n	n	.	n	n	n	n
	*	*	*			R	E	P	E	A	T		Y		n	n
	*	*	*			Y	i	=		n	n	.	n	n	n	n
RECT POCKET	*	*	*		R	E	C	T		(F)	(q)	Z	%	n	n	n
	*	*	*					X	Y	C	U	T	%	n	n	n
	*	*	*			Z	H	=		n	n	.	n	n	n	n
	*	*	*			Z	d	=								
	*	*	*			X	1	=								
	*	*	*			Y	1	=								
	*	*	*			X	A	=								
	*	*	*			Y	B	=								
ELSEWHERE (OPTION)	*	*	*			X	1	=								
	*	*	*			Y	1	=								
	*	*	*			X	A	=								
	*	*	*			Y	B	=								
REPEAT (OPTION)						R	E	P	E	A	T		X		n	n
						X	i	=		n	n	.	n	n	n	n
	*	*	*			R	E	P	E	A	T		Y		n	n
	*	*	*			Y	i	=		n	n	.	n	n	n	n

INSTRUCTION FORMAT COTD

	LINE NUMBER / FORMAT															
	1	2	3	4	5	6	7	8	9	10	11	12	13	14	15	16
ARC FRAME	*	*	*		A	R	C									
						X	C	=			n	.	n	n	n	n
						Y	C	=			n	.	n	n	n	n
							a	=		d	d	d	.	d	d	d
DRILL	*	*	*		D	R	I	L		P	E	C	K	=	n	n
	*	*	*			Z	H	=	(S)		n	.	n	n	n	n
	*	*	*			Z	d	=								
	*	*	*			X	=									
	*	*	*			Y	=									
ELSEWHERE (OPTION)	*	*	*			X	=									
	*	*	*			Y	=									
REPEAT (OPTION)	*	*	*			R	E	P	E	A	T		Y		n	n
	*	*	*			X	i	=			n	.	n	n	n	n
	*	*	*			R	E	P	E	A	T		Y		n	n
	*	*	*			Y	i	=			n	.	n	n	n	n

PERIPHERALS AND ACCESSORIES.

1. TOOL HOLDERS

2. THE ROTARY TABLE --- U AXIS.

3. THE INTERFACE CONSOLE

    1) THE CASSETTE
    2) THE PRINTER

4. SOFTWARE PACKAGES FOR PC BASED SYSTEMS

    1) COMMUNICATION PACKAGE
    2) SIMULATION PACKAGE & EDITOR
    3) CAD / CAM PACKAGES.

5. TAPPING

6. HIGH SPEED SPINDLE ATTACHMENTS

7. TOOLING

8. PUBLICATIONS

9. COMPLAINTS ON THIS OPERATION MANUAL

PERIPHERALS AND ACCESSORIES

1. TOOL HOLDERS

There are a wide variety of tool holders available on the market for face mills, end mills, drill chuck, arbors, saw arbors etc.
Dyna offers collet chucks and 1/4", 3/8", 1/2" end mill tool holders from Command corporation. (800 328 2197) that allow the tools to be locked closer to the spindle nose. These are called "Short Gage Length". They are listed below.
Each tool holder requires a pull stud.

* DR16	BT-30 Short gage length (2.3") Collet chuck.
* DR16 - 9	Set of (9) collects for above Range of sizes from 0.39 - .393
* CC2 - 0016	Wrench for above
* DR20	BT-30 Short gage length (2.3") Collet chuck.
* DR20 - 1200	Set of (12) collects for above Range of sizes from .039 - .511
* XCCW - 0200	Wrench for above
*	BT-30 short gage length (1.25") 1/4" Endmill Toolholder.
*	BT-30 Short gage length (1.31") 3/8" Endmill Toolholder.
*	BT-30 Short gage length (1.4") 1/2" Endmill Toolholder.

Other toolholder are available upon request.

2. The ROTARY TABLE — the U axis.

This is the optional rotary table that plugs into the right side of the power pack. The U axis driver board must also be plugged into the power pack at the back next to the Z axis driver board.

MECHANICAL

The rotary table has a 6 inch diameter face and can be mounted horizontally or vertically. It has a maximum cyclic variation in absolute positioning of 1 minute 20 seconds (.02 degrees) Each stepper step corresponds to .004 degrees so the circular resolution is 1 part in 90,000. The maximum rotation speed is 40 degrees per second or 9 rpm.

BACKLASH

This is almost negligible. The worm, worm gear spacing is controlled by a cam action on the worm and is locked by a T screw on the input shaft. Maximum engagement is set internally by a set screw. Do not over engage or the table can lock up or cause excessive wear.
If there is concern with this error, all moves should be made in one direction, any back moves should swing past the desired value then forward again. There is no electronic measurement of the backlash.

DIRECTION

The table moves clockwise for a positive U move, so the tool appears to move counter-clockwise.

INSTRUCTION for U

1)	GO	(f) (c)	u	0 to +/- 999.999 degrees (MOD 360)
2)	GR	(f) (c)	u	0 to +/- 999.999 degrees (MOD 360)
3)	ZERO		u	Zero U at this current value.
4)	SETUP		u	Set up the reference point for U.
5)	DISPLAY		u	Display U values.
6)	CS		u	Change sign on U and go there.
7)	FEEDRATE		u	Set U feedrate.
8)	END			Rotate U back to set up point on any END statement.

3. INTERFACE CONSOLE

The user may have an optional desktop interface console. It is shown on the next page. The basic unit without the printer or cassette option allows the user to enter programs at his desk directly into the CMOS memory of the controller. He can then unplug the controller and replug it into the machine to run his program. He may also run his program at the desk for time estimation.
After entering the program, press the program run key, answer YES to NONSTOP?. It will halt at SET UP. The user will have to go through this set up procedure to position the SET UP COODS correctly. Pressing the NEXT will restart the program run.
With the interface console, the user may add a 16 column alphanumeric printer and/or digital micro-cassette for off-line storage.

3-1. 16 CHARACTER ALPHANUMERIC PRINTER

Simply plug the unit into the back of the interface console, push the paper feed switch, and the paper will feed through the printer. To print out a program, go to LINE MODE and position the display at the program START line then press the shift and READ / WRITE keys. The display will ask.

PRINTER ?

Answering YES will start the printer to print line by line, automatically. It will halt by itself when it comes to the END statement. It may be restarted by pressing the shift and READ / WRITE keys in the LINE MODE again. Pressing HALT will stop the printer, pressing NEXT will restart it. Pressing a mode key will exit the controller from the printer.
The user will need to push the paper feed key manually if he wishes blank space beneath his program. Loading a new roll of paper is done by feeding the paper through the roller and pushing the paper feed key.

NOTE : NOT AVAILABLE FOR 2800

3-2. THE MICRO-DIGITAL CASSETTE

Plug this in at the back of the interface console. The red light will come on to indicate power when the power switch is turned on. Now a word of explanation about how the data is organized. The controller holds 901 instruction lines, this is the line number amount available to the user. We call this a FILE. The FILE may contain a program of only 2 lines in length or it may be filled completely with a 901 line program.

One micro-cassette will store 40 FILES. The user may choose to have 1 program per FILE per micro-cassette or he may choose to put several programs in each FILE with 40 FILES per cassette. If there exists a strong probability of cassette loss or damage, then the former situation may be preferable to the latter.

Each FILE has a number. It is up to the user to remember which program resides in which FILE. When the user wishes to store his current program or set of programs in the controller, he switches to LINE MODE, answers "NO" to PRINTER?, and "YES" to CASSETTE? The controller will ask him WRITE?, he answers "YES". The controller will then ask for the FILE NO. assignment. The user memory will be moved into the cassette. If the user has a file in tape which is no longer used or required, it is necessary to clear the FILE NO. first with the clear instruction (answer "NO" to WRITE?, "NO" to READ?, "NO" to CLEAR ALL?). Enter the FILE NO. to be cleared and press the NEXT key.

A visual picture of the cassette would be a row of shelves with numbers on them. You may put in or take out one controller memory (file) at a time.

To read back, the user ("NO" to WRITE?, "YES" to READ?) enters the required FILE NO. and it will be automatically transferred across. It will destroy any program currently residing in program memory. If the requested FILE cannot be found, the controller will so tell the user with a TAPE END message.

On the next page is the flow diagram for the printer and cassette.

FLOWCHART FOR THE PRINTER, CASSETTE AND RS232 - C

1) GO TO LINE NO. MODE SELECT THE LINE WHERE THE PROGRAM STARTS
2) TOUCH THE READ / WRITE KEY
3) FOLLOW THE FLOW CHART

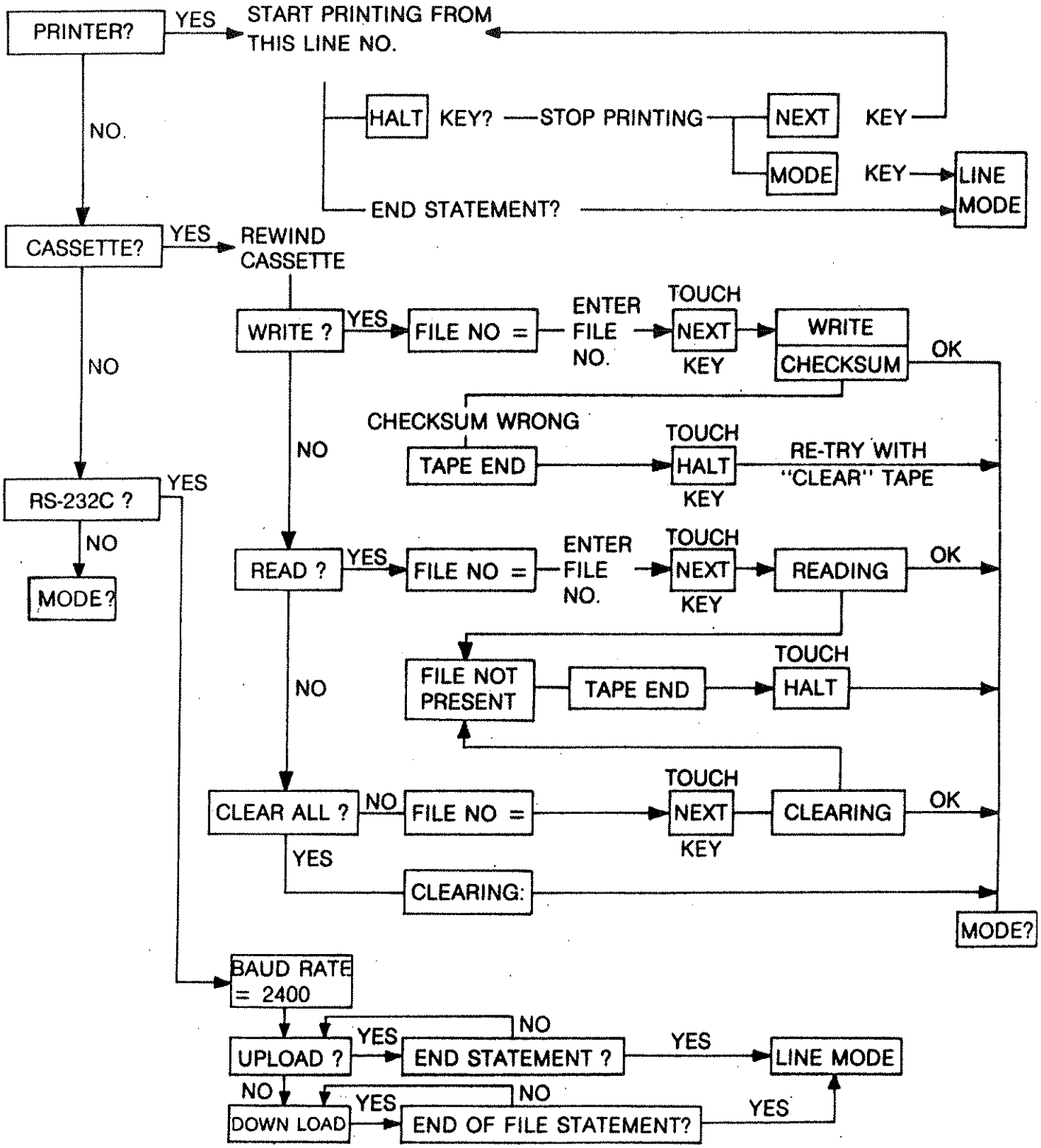
PRINTER?
YES
START PRINTING FROM THIS LINE NO.
NO.
HALT
KEY?
STOP PRINTING
NEXT
KEY
MODE
KEY
LINE MODE
END STATEMENT?
CASSETTE?
YES
REWIND CASSETTE
NO
WRITE ?
YES
FILE NO =
ENTER FILE NO.
TOUCH
NEXT
KEY
WRITE
CHECKSUM
OK
CHECKSUM WRONG
TAPE END
TOUCH
HALT
KEY
RE-TRY WITH "CLEAR" TAPE
NO
RS-232C ?
YES
NO
MODE?
READ ?
YES
FILE NO =
ENTER FILE NO.
TOUCH
NEXT
KEY
READING
OK
NO
FILE NOT PRESENT
TAPE END
TOUCH
HALT
CLEAR ALL ?
NO
FILE NO =
TOUCH
NEXT
KEY
CLEARING
OK
YES
CLEARING:
MODE?
BAUD RATE = 2400
UPLOAD ?
YES
END STATEMENT ?
NO
YES
LINE MODE
NO
DOWN LOAD
YES
END OF FILE STATEMENT?
NO
YES

4. SOFTWARE PACKAGES FOR PC BASED SYSTEMS

1) COMMUNICATION

On the right side of the power pack there is an RS232-C communication port. This is for interfacing the machine to a PC (XT, AT, AT clone). The user can upload programs from the controller to the PC or download programs. If the programs are generated by a CAD/CAM package they can easily exceed 900 lines so there is also a block execution mode that will continually download blocks of program, 900 lines at a time. 999 lines for 4000 series.
The program is transmitted or received in lines of 16 characters of ASCII exactly as shown in the display. Each line is delimited by a CR, LF. and the program is terminated by a Control Z.
Dyna has put together a communication package on a floppy disk that contains all the user options together with a utility that will correctly format break points at 900 lines and re - number the lines downloading. A users manual also comes with this package. For more information please contact Dyna.
The minimum hardware configuration required is

1. An IBM PC, XT, AT or 386 machine with monitor, or a 100% IBM compatible computer with monitor.
2. 256k memory
3. 5 1/4" floppy disc drive
4. One serial I/O port
5. One RS232-C cable with 25 pins (female connector) at Dyna's end and 25 or 9 pins compatible with the computer at the other end.

2) Simulation Package & Editor

This comes floppy disk. It is intended to simulate the tool path of a given program. It allows the user to build up his program with GO / GR commands and function calls and then run it graphically at the computer.

3) CAD / CAM PACKAGES

There exists a wide variety of CAD / CAM packages on the market that can handle almost any shape. They output tool moves that have to be re-translated through a post (processor) for a specific machine. Make sure they have a DYNA POST.
Dyna offers several CAD / CAM packages - and for further information, please contact us.

5. TAPPING

The spindle on the 2800 is not reversible. In order to tap use a Tapmatic mounted in a 3/4" collet. It may be necessary to modify the stop arm by bending it flat as it will interfere with the spindle housing. Get the reversing NC type. The company is TAPMATIC CORP., 1851 KETTERING ST., IRVINE, CALIFORNIA 92714-5673 PHONE (714) 261-9392 for their general catalog.

6. HIGH SPEED SPINDLE ATTACHMENTS

For high speed jig boring (and drilling) obtain the NSK catalog from NSK-AMERICA CORP., 101 W.LIONS DRIVE, SUITE 111, BARRINGTON, ILLINOIS 60010 PHONE (312) 382-6688.
They offer 3 air driven attachments with rpm upto 200,000.

7. TOOLING

There is a huge variety of supply houses for end mills, drills, saws, vises, clamps, fixtures etc. Send or ask for catalogs from

1. J and L INDUSTRIAL SUPPLY 19339 GLENMORE
   DETROIT, MICHIGAN 48240 PHONE 1-800-521-9520
2. ENCO MFG. CO. 1546 TRIMBLE RD, SAN JOSE
   CALIF. 95131-9836 PHONE 1-800-621-4145

For microdrills : -

1. TITEX TOOLS 180 LAUREL ST.
   GREENFIELD, MA. 01301
   PHONE 1-800-262-2436

For micromills : -

1. INTERNATIONAL CARBIDE 1348 PLAINFIELD AVE.,
   P.O.BOX 1426 JANESVILLE, WI. 53547
   PHONE (608) 757 - 0177

8. PUBLICATIONS (MONTHLY) FOR ADDITIONAL SOURCES OF TOOLS & TOOLING

MODERN MACHINE SHOP	(513) 231 - 8020
MACHINE AND TOOL BLUE BOOK	(312) 665 - 1000
DESIGN NEWS	(303) 388 - 4511
AMERICAN MACHINIST	(212) 512 - 2000
CUTTING TOOL ENGINEERING	(312) 441 - 7520

9. COMPLAINTS ON THIS OPERATION MANUAL

If some parts of this manual are unclear or badly explained please let us know. We shall endeavour to incorporate any suggestions for improvements in the next edition.

DM2800
SERVICE MANUAL

(PRELIMINARY)

DYNA MECHTRONICS
926 W MAUDE AVENUE
SUNNYVALE, CA. 94086
TEL: (408) 773 - 8899
FAX: (408) 773 - 8910
TWX: (408) 773 - 8919
ISSUED: MARCH / 1989

SECTION 1

1. Introduction

The DM2800 is a high precision milling and drilling CNC machine. The machine has been designed and factory adjusted to provide trouble free operation with minimal maintenance and care.
If service is required this manual provides the information required to isolate the problem, usually with the help of our local distributor or one of our service engineers. It is in the user's interest to be familiar with the location of the few boards in the power pack, how they operate in general and some of our diagnostic philosophy.

2. Warranty

Please refer to the warranty card that came with the machine.

3. Software release

The ROM checksum (Goto MANUAL MODE, YES to DIAGNOSTICS) is the current release level. This level we believe to be relatively free of bugs. Occasionally we release a new level to incorporate improvements and to clear up any bugs that may be found in the current release. If the user suspects a bug, we need a sample program and if verified, the user will get a free update when the new level is released.
If the user wants a software update we offer a one day turn around on the controller.

SECTION 2

Some service problems are self imposed. They fall into three categories - the machine, the programing and communication on the RS232-C and with some care they can be avoided.

1. Introduction

1) Do not use an air nozzle to clear chips away from the workpiece. The smaller chips can be blown easily through the air filter into the electronics and can cause all kinds of problems. They can be blown into the slides and accumulate with the oil causing mechanical problems. It is recommended to brush or vacuum the chips.

2) For graphite or ceramic it is mandatory to vacuum or flush with coolant. The first material is highly conductive and the second highly abrasive.

3) For health reasons also, breathing aerosols of metal particles and coolant generated by the air nozzle is not enhancing to one's lifestyle.

4) Periodically inspect:
   1. Oil level in the lubrication pump. Use medium way oil obtained from your local tool distributer.
   2. Dust filters in the power pack. Check for the presence of metal dust, coolant in the bottom of the power pack.
   3. Belt condition.
   4. Coolant level if used.

5) Be careful with coolants. Some types will cause rusting of the vise, table or slides. The machine should not be left with splashed coolant over it for extended periods of time.

6) Do not grudge an excess of lubricating oil. Under lubrication can cause ball screw flaking and a variety of other problems.

7) If the machine has not been used for several weeks prime the oil pump first by pulling up the knurled knob. Oil dries out and can lock the axis. Use the emergency move to free the axes and spread oil.

8) Make sure the power lines are clean. Voltage surges will produce erratic behavior. These are produced by large AC motors being switched off or on as in air condition -ers, large machines etc, by other companies down the road.
   This situation can produce a tremendous amount of frustration and the use of a line conditioner should be investigated.

9) Do not use the finger nails to press the membrane keyboard as this can damage it.

10) Do not plug or unplug the controller with power on, either at the desktop unit. This may cause program alteration in the CMOS memory or other damage.

2. On the program side

1) The user if he can should attend our programming class. Especially if he has no CNC background.

2) When starting off do very small programs to make yourself familiar with the opera -tions. Do trial runs in the air or on plastic. Break a big program up into small parts and incrementally check it by building it up gradually.

3) If an unexpected move occurs and you don't know why rerun the part. Repeatability of wrong moves is a sign of a program mistake, entry mistake or a misunderstanding of the manual.

4) In production runs put in GO X, GO Y instructions before the SET UP. This will preserve the SET UP for the next day. The procedure is described in the manual.

5) Use END NEWPART instruction at the end. This allows the machine to self correct against the limit switches. If the tool does not go back exactly to the original SET UP position note the deviation on that particular axis. There may be a problem (oil, coolant, chips) contaminating that limit switch.

3. On the communication side

Please check your interface card and you are operating out of the right port. Please check that your RS232C cable is correctly wired, check with our drawing in the communication manual. The computer has to be IBM or IBM compatible. Check an upload first. Enter a small program into the controller and see if you can upload it to the computer.

4. When there is a problem

1) Please call your local distributer first. He may be able to help you. If he cannot he will refer the problem to us. Call our 800 number (800 - 421 - 5010) and ask for the service department. The service girl will note the call then route it to the appropriate service engineer. Her sole responsibility is to make sure the problem is fixed as soon as possible and she will confirm with you that if has been fixed. Do not by pass her as things have a tendency to go wrong.

2) If the problem is the program, it is difficult to debug this over the phone. Send or fax (408 - 773 - 8910) the drawing and your program and we shall try and run it here. If it involves exotic materials or exotic tools include these as well.

3) If the problem is the machine, the service engineer may ask you to try a few things so he can get a clear picture of the problem. It is helpful to him if you can locate the appropriate board or part and have a rough idea how things operate. The servicing is at the board level. We will exchange boards or the appropriate part. The service girl will give you an RMA number. Delivery is by normal Federal Express. For faster delivery the user pays the difference.

4) On the mechanical side of the machine there is very rarely a service problem. The ball screws and nut combinations should not be dis-assembled at all. Everything is preloaded and factory adjusted. This also holds for the spindle assembly. The spindle motor is brushless and should not be touched. The axes motors (likewise brushless) and mounting plates can be unscrewed to check the motor (it will run in air under emergency move) and to check the pinion and spur gear.

SECTION 3

1. DIAGNOSTIC PHILOSOPHY

This is very simple. Switch the machine ON and see how far you get on bringing the machine up in stages. Open the power pack door to check

STAGE 1 Is there power in the system?
Check the lights on the +5V power supply and 48V power supply - do the fans come on.
If no power (the circuit breaker does not come on) you have problem on the power side.
Check emergency switch, wall socket plug, 10A fuse.

STAGE 2 Is there power (+5V DC) at the controller?
The controller display should come on to display READY? Any other message indicates a problem with the controller. Check the cable plug is correctly inserted into the controller.

STAGE 3 Answer YES to READY and check the next phase, the axes initialization. Each axes moves away slightly from the limit switch, then moves towards it (detects it goes in and comes out (so it just touches it). If one axis does not do this but stays stationary you have a motor / drive problem. Confirm by switching the machine off, then on, and trying the emergency move on that axis.
If the axes moves in to the limit switch and sits and hums you have a limit switch detect problem, by switching off on then going to the emergency move back the axis off and check the limit switch again. The problem may be there (most probably), at the limit switch board or at the distribution board.

STAGE 4 Check the spindle. Go to local. Turn the spindle on and increase the speed. If the spindle does not rotate check the 5A circuit breaker and then check the 1A fuse. If these are good then the motor amplifier (probably) or the D/A converter board has a problem. If there is no speed control at all then it is the amplifier.
If the RPM indicator is not working, the board is located behind the spindle front plate.

If you have located at what stage the problem exists then there is only one more test you can do if it is a motor axis problem on X or Y. Switch the machine off and unplug it from the wall then interchange the X and Y driver boards. If the problem stays with the axis it is the motor. If the problem moves to the other axis it is the driver board.
Once you have a fair idea of where the problem lies please contact our service department.
When you receive a board for exchange on the machine, make sure you touch the machine to ground out any static on you before handling the board. Remove and insert connectors from the base, not by the cabling itself.
Always remove the power plug from the wall before doing any board or component swapping.

SECTION 4

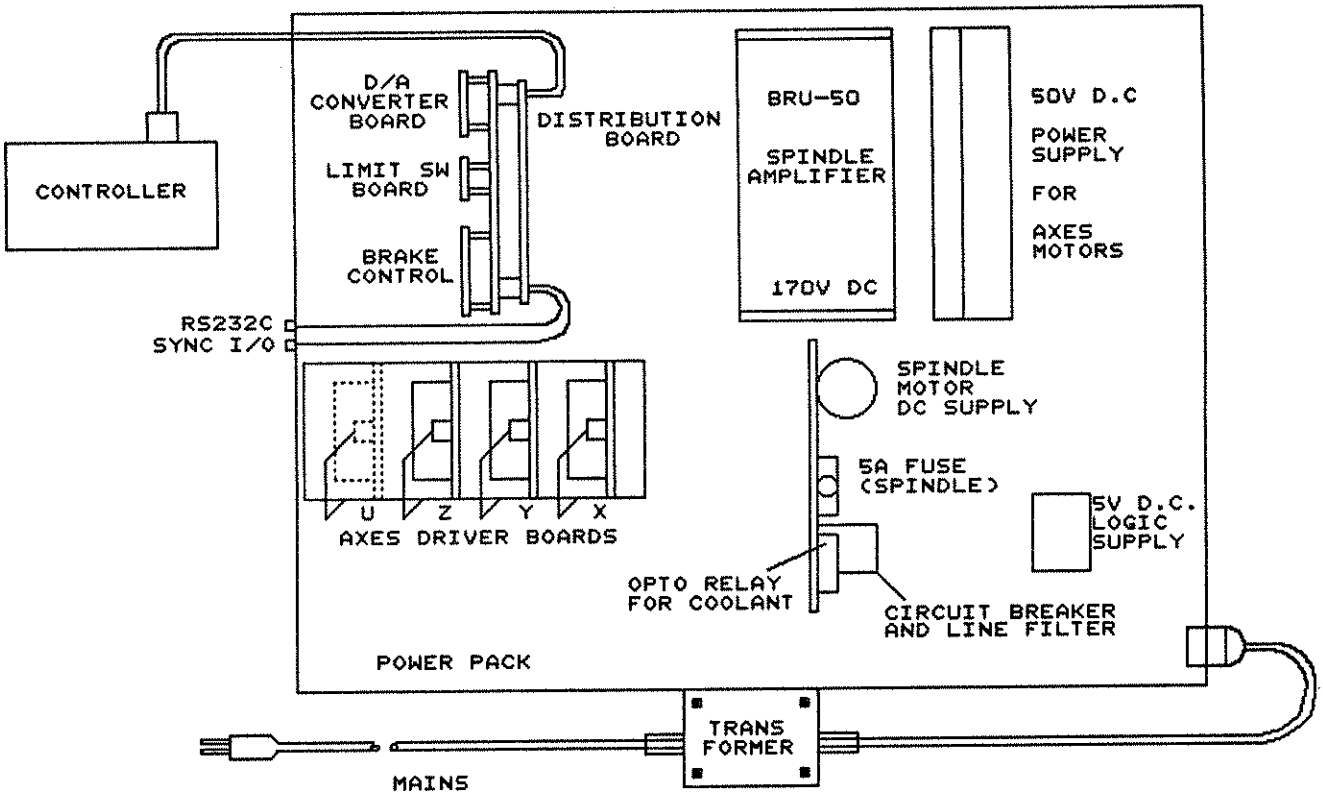

1. Operation overview

Above is the layout of the power pack. On the next page is the block diagram of the electronics.

The controller controls the operation of the machine. Logic signals to control the axes driver boards, the spindle off /on, sync I/O, RS232C are sent to the distribution board which distributes them. The distribution board also collects signals from the limit switches (via the limit switch board), from the axes driver boards (am here) from the sync I/O and RS232C and the probe.

The axes driver boards have signals in (50V DC, 5V, STEP, DIRECTION, AM HERE) through a connector at the back of the board. At the front is the 8 line connector to the synchrostep stepper motor. The u,x,y driver boards are interchangeable, the z is not.

On the power, side the power first goes through a 10A fuse then the emergency switch then the transformer. Internally 115V AC is used and this goes to the power supply switchers and to be rectified for the spindle amplifier. There is a 5A circuit breaker on this line to handle a stalled spindle.

SECTION 4 COTD

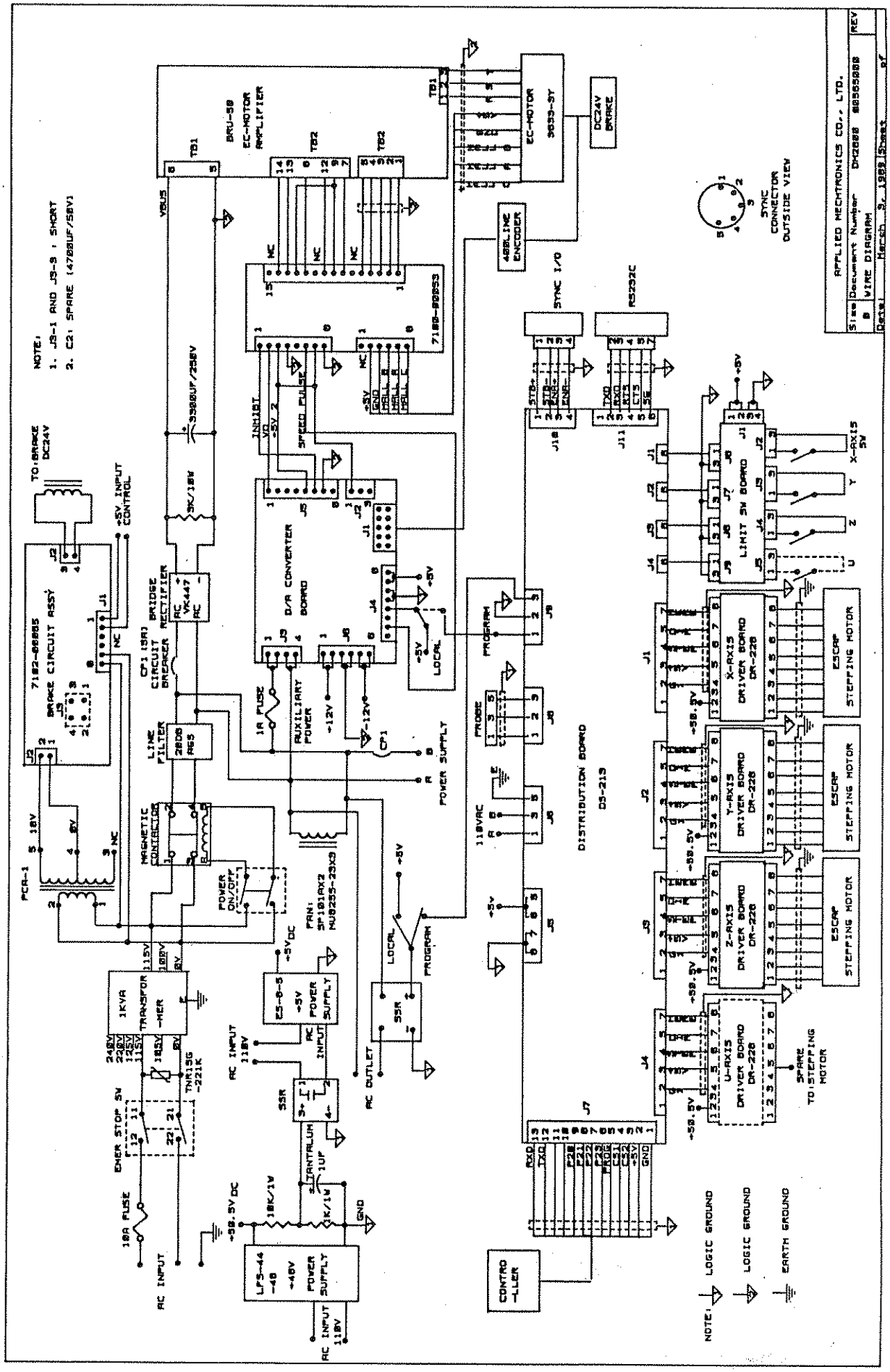

The emergency brake on the spindle works as follows. With power on, the brake relay keeps voltage on across a large capacitor.
When power is turned off via the emergency switch, the relay flips over and connects the stored capacitor energy to the electric brake on the spindle.
There is sufficient energy stored in the capacitor to stop the motor.

QUICK KEY GUIDE TO DM2800

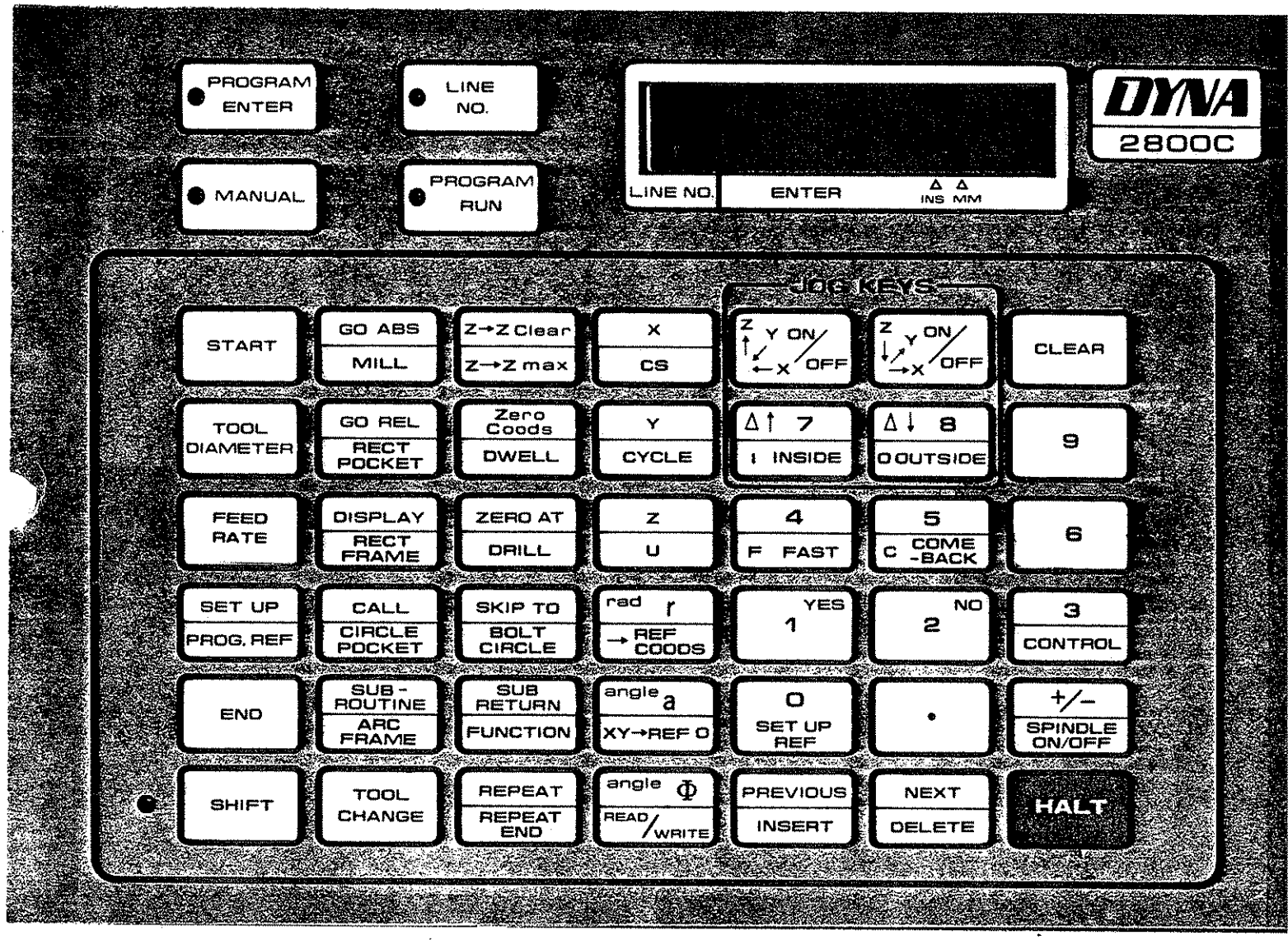

MAIN 2800 KEYS AND THEIR FUNCTIONS

PROGRAM ENTER :	Entering programs into the controller.
MANUAL :	Tool calibration, manual moves and diagnostics.
LINE NUMBER :	For selecting a specific line number in the controller, clearing memory or sections of memory, uploading or downloading programs, inserting or deleting lines in programs.
PROGRAM RUN :	To run the program in the controller.
START :	Goes at the beginning of a program. Asks for INCH? or MM? and a program number. NN can be from 00 - 99.
TOOL DIA. :	Must be entered for each tool to allow for cutter compensation. (inside or outside).
FEEDRATE :	Specified in inches per minute or cm per minute for each axis individually or all together. (.05 - 30 IPM or .13 - 76.4 CM / MIN).
SETUP :	Used for setting up the program reference point on X, Y, Z, C, U. This must be done on the machine during program run. Setup creates the part zero. The letters will capitalize when the setup key is pushed. Use the no key to select the next axis in the display.
END :	Goes at the end of your program. Asks for "END", "END NEWPART", or "END NEW REFERENCE".
SHIFT :	Press the shift key to gain access to the blue key functions.
GO ABS :	Absolute move from the zero coordinate on a specified axis or axes.
GO REL :	Incremental move from the current tool position on a specified axis or axes.
DISPLAY :	Display current X, Y, Z values of the tool. This can be executed anywhere in the program except in a canned cycle.
CALL :	Call up subroutine, asks for a subroutine number.

SUB - ROUTINE :	Goes at the beginning of a subroutine and numbers the subroutine. (macro program).
SUB - RETURN :	Goes at the end of the subroutine. Ends the subroutine and returns to the program.
TOOL CHANGE :	Used to allow for tool change, tool number.
Z > Z CLEAR :	Moves Z to the clearance point specified in the setup line in the program.
ZERO COODS :	Creates a local zero at the current tool location. Any combination of axes may be used. Be careful with Z.
ZERO AT :	Creates a local zero at a specified point. The tool does not move there.
SKIP TO :	Allows you to skip to any line in the program and then continue on from that line in the program.
REPEAT :	Repeat all or certain sections of the program a specified number of times. Asks for number of repeats.
REPEAT END :	Ends the repeat cycle, goes at the end of the section being repeated.
X, Y, Z, U :	used to enter specific axis moves on the machine or rotary table.
RAD :	To enter a radius value. For arcs in XY plane.
ANGLE :	To enter an angle value. For arcs in XY plane.
ANGLE Q :	Used to generate 3 axis circular arcs.
X, Y, Z JOG KEYS :	Manually jog axis in direction specified by arrows. Top keys are continuous move and the lower keys are in .001 increments.
0 - 9 KEYS :	To enter numerical data and decimal point.
PREVIOUS :	Used to go back and look at previous lines in a program. Used in the line no. mode and program enter mode.
NEXT :	Used to enter data into the controller. Like a enter or return key. Allows you to move ahead one line in the program.

CLEAR :	For clearing a line of data in program enter mode or for clearing all or sections of memory in the controller.
(+ / -)	To insert positive or negative data. (default is positive).
HALT :	Stops a program when desired, the next key allows the program to continue.
> REF COODS :	Cancels out any existing local zeros and restores the original set up zero.
XY > REF 0	Moves the tool to the reference zero.
CS :	Change sign. Reverses the sign of the current tool tip position. Can be used with any axis.
INSIDE / OUTSIDE :	Allows cutter compensation on single axis moves only. Also on polar moves.
FAST	Allows a rapid move.
COMEBACK :	Go to a point and then return to the start point.
Z > Z MAX :	Move Z up to the maximum height.
DWELL :	Delays action of the program. (10 = 10 seconds).
SET UP REF :	Used to tell controller that this coordinate point has been set as the reference. (In set up during program run).

MILL
RECT POCKET
RECT FRAME
CIRCLE POCKET
ARC FRAME
DRILL
BOLT CIRCLE

Canned routines.

FUNCTION :	Used for scale OFF / ON
SPINDLE ON / OFF :	Turns spindle off / on in program mode.